City of Rolling Hills INCORPORATED JANUARY 24, 1957

2 PORTUGUESE BEND ROAD
ROLLING HILLS, CA 90274
(310) 377-1521

AGENDA | **CITY COUNCIL** | **CITY OF ROLLING HILLS**
Regular City Council Meeting | **Monday, June 10, 2024** | **7:00 PM**

The meeting agenda is available on the City's website. The City Council meeting will be live-streamed on the City's website. Both the agenda and the live-streamed video can be found here: https://www.rolling-hills.org/government/agenda/index.php

Members of the public may submit written comments in real-time by emailing the City Clerk's office at cityclerk@cityofrh.net. Your comments will become part of the official meeting record. You must provide your full name, but please do not provide any other personal information that you do not want to be published.

Recordings to City Council meetings can be found here: https://www.rolling-hills.org/government/agenda/index.php

Next Resolution No. 1370 *Next Ordinance No. 385*

1. CALL TO ORDER

2. ROLL CALL

3. PLEDGE OF ALLEGIANCE

4. PRESENTATIONS/PROCLAMATIONS/ANNOUNCEMENTS

5. APPROVE ORDER OF THE AGENDA

This is the appropriate time for the Mayor or Councilmembers to approve the agenda as is or reorder.

6. BLUE FOLDER ITEMS (SUPPLEMENTAL)

Blue folder (supplemental) items are additional back up materials to administrative reports, changes to the posted agenda packet, and/or public comments received after the printing and distribution of the agenda packet for receive and file.

7. PUBLIC COMMENT ON NON-AGENDA ITEMS

*This is the appropriate time for members of the public to make comments regarding items**not** listed on this agenda. Pursuant to the Brown Act, no action will take place on any items not on the agenda.*

8. CONSENT CALENDAR

Business items, except those formally noticed for public hearing, or those pulled for discussion are assigned to the Consent Calendar. The Mayor or any Councilmember may request that any Consent Calendar item(s) be removed, discussed, and acted upon separately. Items removed from the Consent Calendar will be taken up under the "Excluded Consent Calendar" section below. Those items remaining on the Consent Calendar will be approved in one motion. The Mayor will call on anyone wishing to address the City Council on any Consent Calendar item on the agenda, which has not been pulled by Councilmembers for discussion.

8.A. APPROVE AFFIDAVIT OF POSTING FOR THE CITY COUNCIL REGULAR MEETING OF JUNE 10, 2024

RECOMMENDATION: Approve.
CL_AGN_240610_CC_AffidavitofPosting.pdf

8.B. APPROVE MOTION TO READ BY TITLE ONLY AND WAIVE FURTHER READING OF ALL ORDINANCES AND RESOLUTIONS LISTED ON THE AGENDA
RECOMMENDATION: Approve.

8.C. APPROVE THE FOLLOWING CITY COUNCIL MINUTES: MAY 13, 2024 REGULAR MEETING
RECOMMENDATION: Approve as presented.
CL_MIN_240513_CC_F.pdf

8.D. PAYMENT OF BILLS
RECOMMENDATION: Approve as presented.
CL_AGN_240527_CC_PaymentOfBills_E.pdf
CL_AGN_240610_CC_PaymentOfBills_E.pdf

8.E. REPUBLIC SERVICES RECYCLING TONNAGE AND COMPLAINT REPORTS FOR APRIL 2024
RECOMMENDATION: Receive and file.
VC_REP_240521_April_YTD_TonnageReport.pdf
VC_REP_240521_April_C&D_Report.pdf
VC_REP_240521_April_CallLog_Redacted.pdf
VC_REP_240528_April_ComplaintsList2024_F_Redacted.pdf
VC_REP_240528_April_RedTagList.pdf

8.F. APPROVE THE FOLLOWING STANDING COMMITTEE MINUTES: JANUARY 12, 2024 SOLID WASTE & RECYCLING COMMITTEE SPECIAL MEETING MARCH 11, 2024 AND MAY 6, 2024 FINANCE, BUDGET, AND AUDIT COMMITTEE REGULAR MEETINGS
RECOMMENDATION: Approve as presented.
CL_MIN_231012_SWR_F.pdf
CL_MIN_240311_FBA_F.pdf
CL_MIN_240506_FBA_F.pdf

8.G. ADOPT RESOLUTION NO. 1366, A RESOLUTION OF THE CITY COUNCIL OF THE CITY OF ROLLING HILLS, CALIFORNIA, IN SUPPORT OF THE HOMELESSNESS, DRUG ADDICTION, AND THEFT REDUCTION ACT (INITIATIVE 23-0017A1) FOR TARGETED REFORMS TO PROPOSITION 47
RECOMMENDATION: Approve as presented.
ResolutionNo1366_StateBallotInitiative_23-0017A1_Support.pdf

8.H. ADOPT RESOLUTION NO. 1367, A RESOLUTION OF THE CITY COUNCIL OF THE CITY OF ROLLING HILLS, CALIFORNIA, ASSIGNING ITS AVAILABLE PROPOSITION C TRANSPORTATION FUNDS TO THE CITY OF ROLLING HILLS ESTATES FOR THE REHABILITATION OF DEEP VALLEY DRIVE / DRYBANK DRIVE / INDIAN PEAK ROAD
RECOMMENDATION:

Approve as presented.

ResolutionNo1367_PropC_Funds_RHE_F.pdf

8.I. REAPPROVE A PROFESSIONAL SERVICES AGREEMENT WITH JTL CONSULTANTS FOR $5,000 PER FISCAL YEAR FOR ON-CALL ARBORIST SERVICES TO SUPPORT STAFF IN FIRE FUEL ABATEMENT CODE ENFORCEMENT CASES

RECOMMENDATION: Approve as presented.

Exhibit A - CA_AGR_Agrmnt_JTL Consultants -Arborist_20240610_JTL_Signed_F.pdf
Exhibit B - Agrmnt_JTL Consultants -Arborist_2019-07-22.pdf

9. EXCLUDED CONSENT CALENDAR ITEMS

10. COMMISSION ITEMS

11. PUBLIC HEARINGS

11.A. CONSIDERATION OF RESOLUTION NO. 1364 OF THE CITY COUNCIL OF THE CITY OF ROLLING HILLS ADOPTING THE FISCAL YEAR 2024-2025 CITY OF ROLLING HILLS BUDGET INCLUDING THE GENERAL FUND; REFUSE COLLECTION FUND; TRANSIT FUND - MEASURE R; TRANSIT FUND - MEASURE M; TRANSIT FUND - PROPOSITION A; TRANSIT FUND - PROPOSITION C; COPS FUND; MEASURE W FUND; AND RESOLUTION NO. 1365 ESTABLISHING THE ANNUAL FISCAL YEAR 2024-2025 APPROPRIATIONS GANN LIMIT FOR THE CITY OF ROLLING HILLS

RECOMMENDATION: Approve as presented.

Attachment A - CL_AGN_240610_CC_GeneralFund_BudgetBalancing.pdf
Attachment B - CL-AGN_240610_CC_GeneralFund_AdoptedRevenues.pdf
Attachment C - CL_AGN_240610_CC_GeneralFund_AdoptedExpenditiures.pdf
Attachment D - CL_AGN_240610_CC_Restricted_Refuse_Funds.pdf
ResolutionNo1364_FY24-25_AdoptedBudget.pdf
ResolutionNo1365_FY24-25_AppropLimit.pdf
CL_PBN_240610_PH_CC_FY24-25_Budget_Affidavit.pdf

12. OLD BUSINESS

12.A. ADOPT RESOLUTION NO. 1368, A RESOLUTION OF THE CITY COUNCIL OF THE CITY OF ROLLING HILLS. CALIFORNIA AUTHORIZING A FISCAL YEAR 2023-2024 BUDGET MODIFICATION TO INCREASE APPROPRIATIONS BY $66,345.73 IN FUND 16 FROM A TRANSFER OF GENERAL FUND RESERVES FOR PROVIDING SPECIALTY POTHOLING SERVICES WITHIN THE 20B PORTION OF THE EASTFIELD DRIVE FIRE PREVENTION POWER LINE UNDERGROUNDING PROJECT

RECOMMENDATION: Approve as presented.

ResolutionNo1368_EastfieldDrive20B_Potholing_BudgetAmendment_F.pdf
CA_AGR_240422_HotLineConst_Eastfield_UU_20B_Potholing.pdf

13. NEW BUSINESS

13.A. FISCAL YEAR 2023/24 THIRD QUARTER INTERIM FINANCIAL STATEMENTS FOR THE NINE MONTHS ENDED MARCH 31, 2024

RECOMMENDATION: Receive and file.

Attachment A - CL_AGN_240610_CC_NarrativeAnalysis_FY23-24_Q3_Review.pdf
Attachment B - CL_AGN_240610_CC_GeneralFund_Revenues.pdf
Attachment C - CL_AGN_240610_CC_GeneralFund_Exp_ByDept.pdf
Attachment D - CL_AGN_240610_CC_GeneralFund_Exp_Detail.pdf
Attachment E - CL_AGN_240610_CC_Restricted_Funds.pdf
Attachment F - CL_AGN_240610_CC_GeneralFund_BudgetAmendments.pdf

13.B. ADOPT RESOLUTION NO. 1369 APPROVING A FIVE-YEAR MUNICIPAL LAW ENFORCEMENT SERVICES AGREEMENT (MLESA) WITH THE COUNTY OF LOS ANGELES FOR PUBLIC SERVICES PROVIDED BY THE LOS ANGELES COUNTY SHERIFF'S DEPARTMENT AND AUTHORIZING THE CITY MANAGER TO PROCURE SERVICES OF THE LOS ANGELES COUNTY SHERIFFâ€™S DEPARTMENT ANNUALLY UP TO AN AMOUNT AUTHORIZED IN THE CITYâ€™S OPERATING AND CAPITAL BUDGET FOR THE PERIOD OF JULY 1, 2024 THROUGH JUNE 30, 2029; AND AUTHORIZE THE MAYOR TO EXECUTE THE MLESA

RECOMMENDATION: Approve as presented.

Attachment A - ResolutionNo1369_MLESA_FY2024-29_F.pdf
Attachment B - CA_AGR_240610_MLESA_2025-29_F.pdf
Attachment C - CA_AGR_190717_MLESA_2019-24_F_E.pdf
Attachment D - CA_AGR_230608_LACoSheriff_575Form_FY23-24_F_E.pdf
Attachment E - GV_GVO_240610_CCA_LiabilityTrustFund_LOU_FinalDraft.pdf
Attachment F - CA_AGR_1977_LACo_LASD_AssumptionOfLiability.pdf
Attachment G - CA_AGR_1991_LACo_LASD_JointIndemnity.pdf
Attachment H - CA_AGR_2009_LACo_LASD_SpecialIndemnity.pdf

14. MATTERS FROM THE CITY COUNCIL

14.A. RECEIVE AND FILE A VERBAL REPORT REGARDING HOMEOWNERS INSURANCE RENEWAL CHALLENGES AND THE CALIFORNIA INSURANCE COMMISSION'S EFFORT TO RESOLVE (MAYOR MIRSCH)

RECOMMENDATION: Receive and file.

CL_AGN_240610_CC_051524_CAConsumerAlert.pdf

15. MATTERS FROM STAFF

15.A. PRESENTATION REGARDING OPEN FIRE PITS WITHIN CITY LIMITS

RECOMMENDATION: Receive and file or provide direction to staff.

Attachment 1: Daily Breeze - 1973 and 2009 Rolling Hills Fire.pdf
Attachment 2: CL_AGN_CC_240610_15_Matters_Staff_FireDeptEmail_240603.pdf
Attachment 3: Bonfire Recreational-Fire Permit Triggers 2023 LACFC.pdf

16. RECESS TO CLOSED SESSION

16.A. CONFERENCE WITH LEGAL COUNSEL - INITIATION OF LITIGATION A CLOSED SESSION WILL BE HELD, PURSUANT TO GOVERNMENT CODE Â§ 54956.9(C) AND (D)(4) REGARDING THE DECISION OF WHETHER TO INITIATE LITIGATION (1 CASE)

RECOMMENDATION: None.

16.B. CONFERENCE WITH LEGAL COUNSEL: THREATENED LITIGATION

GOVERNMENT CODE SECTION 54956.9(D)(2) AND (E)(3)THE CITY COUNCIL FINDS, BASED ON ADVICE FROM LEGAL COUNSEL, THAT DISCUSSION IN OPEN SESSION WILL PREJUDICE THE POSITION OF THE CITY IN THE LITIGATION.NUMBER OF POTENTIAL CASES: (7)(GOVERNMENT CLAIMS ACT FORM SUBMITTED BY VARIOUS PROPERTY OWNERS IN RANCHO PALOS VERDES AGAINST THE CITY OF ROLLING HILLS ALLEGING DAMAGE TO PROPERTY)

RECOMMENDATION: None.

17. RECONVENE TO OPEN SESSION

18. ADJOURNMENT

Adjourning in Memory of longtime resident Parnelli Jones.

Next regular meeting: Monday, June 24, 2024 at 7:00 p.m. in the City Council Chamber, Rolling Hills City Hall, 2 Portuguese Bend Road, Rolling Hills, California, 90274.

Notice:

Public Comment is welcome on any item prior to City Council action on the item.

Documents pertaining to an agenda item received after the posting of the agenda are available for review in the City Clerk's office or at the meeting at which the item will be considered.

In compliance with the Americans with Disabilities Act (ADA), if you need special assistance to participate in this meeting due to your disability, please contact the City Clerk at (310) 377-1521 at least 48 hours prior to the meeting to enable the City to make reasonable arrangements to ensure accessibility and accommodation for your review of this agenda and attendance at this meeting.

City of Rolling Hills INCORPORATED JANUARY 24, 1957

Agenda Item No.: 8.A
Mtg. Date: 06/10/2024

TO: **HONORABLE MAYOR AND MEMBERS OF THE CITY COUNCIL**

FROM: **CHRISTIAN HORVATH, CITY CLERK / EXECUTIVE ASSISTANT TO CITY MANAGER**

THRU: **KARINA BAÑALES, CITY MANAGER**

SUBJECT: **APPROVE AFFIDAVIT OF POSTING FOR THE CITY COUNCIL REGULAR MEETING OF JUNE 10, 2024**

DATE: **June 10, 2024**

BACKGROUND:
None.

DISCUSSION:
None.

FISCAL IMPACT:
None.

RECOMMENDATION:
Approve.

ATTACHMENTS:
CL_AGN_240610_CC_AffidavitofPosting.pdf

Administrative Report

8.A., **File #** 2315 **Meeting Date**: 6/10/2024

To: MAYOR & CITY COUNCIL

From: Christian Horvath, City Clerk

TITLE

APPROVE AFFIDAVIT OF POSTING FOR THE CITY COUNCIL ADJOURNED REGULAR MEETING OF JUNE 10, 2024

EXECUTIVE SUMMARY

STATE OF CALIFORNIA)
COUNTY OF LOS ANGELES) SS
CITY OF ROLLING HILLS)

AFFIDAVIT OF POSTING

In compliance with the Brown Act, the following materials have been posted at the locations below.

Legislative Body	City Council
Posting Type	Adjourned Regular Meeting Agenda
Posting Location	2 Portuguese Bend Road, Rolling Hills, CA 90274 City Hall Window City Website: https://www.rolling-hills.org/government/agenda/index.php https://www.rolling-hills.org/government/city_council/city_council_archive_agendas/index.php
Meeting Date & Time	JUNE 10, 2024 7:00pm Open Session

As City Clerk of the City of Rolling Hills, I declare under penalty of perjury, the document noted above was posted at the date displayed below.

Christian Horvath, City Clerk

Date: June 7, 2024

City of Rolling Hills INCORPORATED JANUARY 24, 1957

Agenda Item No.: 8.B
Mtg. Date: 06/10/2024

TO: **HONORABLE MAYOR AND MEMBERS OF THE CITY COUNCIL**

FROM: **CHRISTIAN HORVATH, CITY CLERK / EXECUTIVE ASSISTANT TO CITY MANAGER**

THRU: **KARINA BAÑALES, CITY MANAGER**

SUBJECT: **APPROVE MOTION TO READ BY TITLE ONLY AND WAIVE FURTHER READING OF ALL ORDINANCES AND RESOLUTIONS LISTED ON THE AGENDA**

DATE: **June 10, 2024**

BACKGROUND:
None.

DISCUSSION:
None.

FISCAL IMPACT:
None.

RECOMMENDATION:
Approve.

ATTACHMENTS:

City of Rolling Hills INCORPORATED JANUARY 24, 1957

Agenda Item No.: 8.C
Mtg. Date: 06/10/2024

TO: HONORABLE MAYOR AND MEMBERS OF THE CITY COUNCIL

FROM: CHRISTIAN HORVATH, CITY CLERK / EXECUTIVE ASSISTANT TO CITY MANAGER

THRU: KARINA BAÑALES, CITY MANAGER

SUBJECT: APPROVE THE FOLLOWING CITY COUNCIL MINUTES: MAY 13, 2024 REGULAR MEETING

DATE: June 10, 2024

BACKGROUND:
None.

DISCUSSION:
None.

FISCAL IMPACT:
None.

RECOMMENDATION:
Approve as presented.

ATTACHMENTS:
CL_MIN_240513_CC_F.pdf

Minutes
Rolling Hills City Council
Monday, May 13, 2024
Regular Meeting 7:00 p.m.

1. CALL TO ORDER

The City Council of the City of Rolling Hills met in person on the above date at 7:00 p.m. Mayor Mirsch presiding.

2. ROLL CALL

Councilmembers Present:	Wilson, Black, Dieringer, Mayor Pro Tem Pieper, Mayor Mirsch
Councilmembers Absent:	None
Staff Present:	Karina Bañales, City Manager
	Christian Horvath, City Clerk / Executive Assistant to the City Manager
	John Signo, Planning & Community Services Director
	Robert Samario, Finance Operations Lead Consultant
	Pat Donegan, City Attorney

3. PLEDGE OF ALLEGIANCE – Councilmember Black

4. PRESENTATIONS / PROCLAMATIONS / ANNOUNCEMENTS

City Manager Bañales introduced the new Administrative Assistant Serena Lopez. Mayor Mirsch invited Ms. Lopez to speak. Ms. Lopez thanked the City Manager and City Council for the opportunity to officially join the organization.

5. APPROVE ORDER OF THE AGENDA

Mayor Mirsch requested that all New Business Items be moved before Commission Items. Without objection, so ordered.

6. BLUE FOLDER ITEMS (SUPPLEMENTAL)

Motion by Mayor Pro Tem Pieper, seconded by Councilmember Black to receive and file Blue Folder Item 13A. Motion carried unanimously with the following vote:

AYES:	Wilson, Black, Dieringer, Pieper, Mayor Mirsch
NOES:	None
ABSENT:	None

7. PUBLIC COMMENT ON NON-AGENDA ITEMS

Public Comment: Kathleen Hughes

8. CONSENT CALENDAR

8.A. APPROVE AFFIDAVIT OF POSTING FOR THE CITY COUNCIL REGULAR MEETING OF MAY 13, 2024

8.B. APPROVE MOTION TO READ BY TITLE ONLY AND WAIVE FURTHER READING OF ALL ORDINANCES AND RESOLUTIONS LISTED ON THE AGENDA

8.C. APPROVE THE FOLLOWING CITY COUNCIL MINUTES: APRIL 22, 2024 REGULAR MEETING

8.D. PULLED BY COUNCILMEMBER WILSON

8.E. PULLED BY MAYOR MIRSCH

8.F. ADOPT RESOLUTIONS NOS. 1362 AND 1363 PERTAINING TO A GENERAL MUNICIPAL ELECTION CONSOLIDATED WITH THE STATEWIDE GENERAL ELECTION TO BE HELD ON TUESDAY, NOVEMBER 5, 2024

Motion by Mayor Pro Tem Pieper, seconded by Mayor Mirsch to approve Consent Calendar except Items 8D and 8E. Motion carried unanimously with the following vote:

AYES: Wilson, Black, Dieringer, Pieper, Mayor Mirsch
NOES: None
ABSENT: None

9. EXCLUDED CONSENT CALENDAR ITEMS

8.D. PAYMENT OF BILLS

Motion by Mayor Pro Tem Pieper, seconded by Councilmember Wilson to approve as presented. Motion carried unanimously with the following vote:

AYES: Wilson, Black, Dieringer, Pieper, Mayor Mirsch
NOES: None
ABSENT: None

8.E. REPUBLIC SERVICES RECYCLING TONNAGE AND COMPLAINT REPORTS FOR MARCH 2024

Mayor Mirsch requested staff discuss the required diversion rate not being met for multiple months with Republic Services.

Motion by Mayor Mirsch, seconded by Mayor Pro Tem Pieper to receive and file. Motion carried unanimously with the following vote:

AYES: Wilson, Black, Dieringer, Pieper, Mayor Mirsch
NOES: None
ABSENT: None

Mayor Mirsch moved to New Business.

13. NEW BUSINESS

13.A. FISCAL YEAR 2024/25 PROPOSED BUDGET - REPORT ON FINANCE COMMITTEE RECOMMENDATIONS

Presentation by Finance Operations Lead Consultant Robert Samario

Motion by Mayor Pro Tem Pieper, seconded by Councilmember Wilson to approve Finance/Budget/Audit Committee and staff recommendations as presented. Motion carried with the following vote:

AYES: Wilson, Black, Pieper, Mayor Mirsch
NOES: Dieringer
ABSENT: None

13.B. CONSIDERATION AND POSSIBLE ACTION TO PROCEED WITH IRS CODE SECTION 170(C)(1) FOR CHARITABLE CONTRIBUTIONS USED FOR PUBLIC PURPOSES

Presentation by City Clerk / Executive Assistant to the City Manager Christian Horvath

Public Comment: Jim Aichele

Motion by Mayor Pro Tem Pieper, seconded by Councilmember Dieringer to receive and file and directing staff to return with a formal policy for accepting gifts and donations for public purposes based on Council comments and direction. Motion carried unanimously with the following vote:

AYES: Wilson, Black, Dieringer, Pieper, Mayor Mirsch
NOES: None
ABSENT: None

Mayor Mirsch moved to Item 10B

10. COMMISSION ITEMS

10.B. ZONING CASE NO. 23-056: SITE PLAN REVIEW FOR GRADING AND VARIANCE TO RETAIN GRADING IMPORT FOR A PROPERTY LOCATED AT 29 MIDDLERIDGE LANE SOUTH, AND FINDING THE PROJECT CATEGORICALLY EXEMPT FROM THE CALIFORNIA ENVIRONMENTAL QUALITY ACT (LOT 239-A-6-MS) (JOHNSON)

Presentation by Planning & Community Services Director John Signo

Public Comment: Ken Johnson

Motion by Councilmember Black, seconded by Councilmember Wilson to receive and file. Motion carried unanimously with the following vote:

AYES: Wilson, Black, Dieringer, Pieper, Mayor Mirsch
NOES: None
ABSENT: None

Mayor Mirsch recused herself from Item 10A due to her residence being within proximity of the Zoning Case subject and left the dais at 8:40 p.m. Mayor Pro Tem Pieper assumed the presiding officer duties.

10.A. ZONING CASE NO. 23-150: SITE PLAN REVIEW TO CONSTRUCT ADDITIONS TO AN EXISTING RESIDENCE AND STABLE GREATER THAN 999 SQUARE FEET, NEW BASEMENT, SWIMMING POOL, OUTDOOR KITCHEN, RETAINING WALLS, COVERED DECKS/PORCHES, GRADING, HARDSCAPE, LANDSCAPE, AND OTHER IMPROVEMENTS; AND VARIANCES FOR CONSTRUCTION IN THE FRONT AND REAR YARD SETBACKS FOR A PROPERTY LOCATED AT 2 POSSUM RIDGE ROAD, AND FINDING THE PROJECT CATEGORICALLY EXEMPT FROM THE CALIFORNIA ENVIRONMENTAL QUALITY ACT (LOT 123-RH) (WHITCOMBE)

Presentation by Planning & Community Services Director John Signo

Public Comment: Jim Aichele

Motion by Councilmember Black, seconded by Mayor Pro Tem Pieper to receive and file. Motion carried with the following vote:

AYES: Wilson, Black, Dieringer, Mayor Pro Tem Pieper
NOES: None
ABSENT: Mayor Mirsch

Mayor Mirsch returned to the dais at 9:19 p.m.

11. PUBLIC HEARINGS – NONE

12. OLD BUSINESS – NONE

14. MATTERS FROM THE CITY COUNCIL

14.A. CONSIDERATION OF RESOLUTION IN SUPPORT OF THE BI-PARTISAN HOMELESSNESS, DRUG ADDICTION, AND THEFT REDUCTION ACT (INITIATIVE 23-0017A1) FOR TARGETED REFORMS TO PROPOSITION 47 (COUNCILMEMBER DIERINGER)

Presentation by City Manager Karina Bañales
Councilmember Dieringer

Motion by Councilmember Black, seconded by Mayor Pro Tem Pieper to support the initiative and direct staff to return with the draft resolution as amended by Mayor Mirsch for adoption. Motion carried unanimously with the following vote:

AYES: Wilson, Black, Dieringer, Pieper, Mayor Mirsch
NOES: None
ABSENT: None

15. MATTERS FROM STAFF

15.A. CONSIDERATION OF SUPPORTING RETAIL THEFT LEGISLATION IN THE CALIFORNIA LEGISLATURE THAT WOULD STRENGTHEN PUBLIC SAFETY

Presentation by City Clerk / Executive Assistant to the City Manager Christian Horvath

Councilmember Dieringer introduced a revised Letter of Support for AB 2943.

Motion by Councilmember Black, seconded by Mayor Pro Tem Pieper to receive and file Councilmember Dieringer's submission. Motion carried unanimously with the following vote:

AYES: Wilson, Black, Dieringer, Pieper, Mayor Mirsch
NOES: None
ABSENT: None

Public Comment: Jim Aichele

Motion by Councilmember Dieringer, seconded by Councilmember Black to send Letters of Support for all pending legislation presented except AB 1772, AB 1779 and AB 1794; and to accept Councilmember Dieringer's amendments to the letter supporting AB 2943. Motion carried unanimously with the following vote:

AYES: Wilson, Black, Dieringer, Pieper, Mayor Mirsch
NOES: None
ABSENT: None

16. RECESS TO CLOSED SESSION – 9:38 P.M.

16.A. CONFERENCE WITH LEGAL COUNSEL: THREATENED LITIGATION GOVERNMENT CODE SECTION 54956.9(D)(2) AND (E)(3) THE CITY COUNCIL FINDS, BASED ON ADVICE FROM LEGAL COUNSEL, THAT DISCUSSION IN OPEN SESSION WILL PREJUDICE THE POSITION OF THE CITY IN THE LITIGATION NUMBER OF POTENTIAL CASES: 1(GOVERNMENT CLAIMS ACT FORM SUBMITTED BY MR. DONALD SCHMID AGAINST THE CITY OF ROLLING HILLS ALLEGING DAMAGE TO PROPERTY IN RANCHOS PALOS VERDES)

17. RECONVENE TO OPEN SESSION – 10:50 P.M.

18. ADJOURNMENT: 10:50 P.M.

The meeting was adjourned at 10:50 p.m. on May 13, 2024. The next regular adjourned meeting of the City Council is scheduled to be held on Monday, June 10, 2024 beginning at 7:00 p.m. in the City Council Chamber at City Hall, 2 Portuguese Bend Road, Rolling Hills, California. It will also be available via City's website link at: https://www.rolling-hills.org/government/agenda/index.php

All written comments submitted are included in the record and available for public review on the City website.

Respectfully submitted,

_____
Christian Horvath, City Clerk

Approved,

_____
Leah Mirsch, Mayor

City of Rolling Hills INCORPORATED JANUARY 24, 1957

Agenda Item No.: 8.D
Mtg. Date: 06/10/2024

TO: **HONORABLE MAYOR AND MEMBERS OF THE CITY COUNCIL**

FROM: **CHRISTIAN HORVATH, CITY CLERK / EXECUTIVE ASSISTANT TO CITY MANAGER**

THRU: **KARINA BAÑALES, CITY MANAGER**

SUBJECT: **PAYMENT OF BILLS**

DATE: **June 10, 2024**

BACKGROUND:
None.

DISCUSSION:
None.

FISCAL IMPACT:
None.

RECOMMENDATION:
Approve as presented.

ATTACHMENTS:
CL_AGN_240527_CC_PaymentOfBills_E.pdf
CL_AGN_240610_CC_PaymentOfBills_E.pdf

CITY OF ROLLING HILLS
AP24-018, ACH24-022
Check Run 05/22/2024

Check No.	Check Date	Payee	Description	Amount
028596	5/22/2024	4Leaf, Inc.	Code Enforcement Services for April 2024	5,130.00
028597	5/22/2024	Best Best & Krieger LLP	Legal Land Use-April 2024	3,610.00
028597	5/22/2024	Best Best & Krieger LLP	Legal-Code Enforcement for April 2024	769.00
CHECK TOTAL			**$ 4,379.00**	
028598	5/22/2024	Cell Business Equipment	Black Printer Toner-Freight Charge	27.00
028599	5/22/2024	McGowan Consulting	Municipal Stormwater Consulting Serv for April 2024	3,028.00
028600	5/22/2024	NV5, INC.	April 2024 Services- CORH-22-11241 Flow Monitoring	427.50
028601	5/22/2024	Orkin	May 2024 Monthly Pest Control	172.99
028602	5/22/2024	Providence Health & Services	Employee Medical Background Services-S. Lopez	95.00
028603	5/22/2024	Palos Verdes Peninsula Unified	School Security Reimbursement 12/29/23-03/28/24	566.30
028604	5/22/2024	PVS, Inc.	PV Security for May 2024	168.00
028605	5/22/2024	Quadiaent	Folding Machine Preventative Maintenance Service	1,370.00
028606	5/22/2024	Republic Services	Residential Service Solid Waste January 2024-June	490,497.66
028607	5/22/2024	City of Torrance	Emergency Planning-Area G Office of Disaster	958.00
ACH-544	5/17/2024	Abila	Accounting Software from 05-18-24 to 06-17-24	349.67
ACH-545	5/1/2024	CalPERS	Health Insurance Prem Stmt for May 2024	15,282.11
ACH-546	4/26/2024	California Water Service Co.	Water Usage 03-29-24 to 04-26-24 Rancho#74654	394.34
ACH-547	4/26/2024	California Water Service Co.	Water Usage 03-29-24 to 04-26-24 Rolling#54654	1,543.57
ACH-548	5/6/2024	The Gas Company	Gas Usage from 04-05-24 to 05-06-24	53.57
ACH-549	4/30/2024	Vantagepoint Transfer Agents -	Deferred Comp Contributions PR Ending 04-30-24	1,873.58
PR LINK	5/17/2024	PR LINK - Payroll & PR Taxes PR#10	Payroll Processing Fee PR#10_05/01/24 - 05/14/24	77.71
PR LINK	5/17/2024	PR LINK - Payroll & PR Taxes PR#10	Pay Period PR#10_05/01/24 - 05/14/24	23,626.62
REPORT TOTAL				**550,020.62**

I, Karina Banales, City Manager of Rolling Hills, California certify that the above demands are accurate and there is available in the General Fund a balance of
$ 550,020.62 for the payment of above items.

Karina Banales, City Manager

CITY OF ROLLING HILLS
AP24-019, ACH24-023
Check Run 06/05/2024

Check No.	Check Date	Payee	Description	Amount
028608	6/5/2024	Alan Palermo Consulting	Apr 28-June 1 2024 Svcs - ADA, Sewer, Tennis Crts	3,052.50
028609	6/5/2024	Bennett Landscape	Landscape Maintenance Service for June 2024	1,139.67
028610	6/5/2024	Cox Communications	Phone Service for May 26 to June 25, 2024	88.49
028611	6/5/2024	Southern California News Group	FY24-25 Budget Hearing Notice	404.54
028612	6/5/2024	Hot Line Construction, Inc.	Potholing Proj-Eastfield Drive DR4382_PJ0177	66,345.73
028613	6/5/2024	County of Los Angeles	April 2024 Animal Care Housing Costs	622.85
028614	6/5/2024	LA County Sheriff's Department	April 2024 Law Enforcement Services	33,732.05
028615	6/5/2024	Murillo Construction	15 UBWC C&D# 876 Refund	1,000.00
028616	6/5/2024	PVS, Inc.	PV Security for June 2024	360.00
028617	6/5/2024	Race Communications	Race Communications Fiber - June 2024	1,020.00
028618	6/5/2024	VCI Construction	Crest Road East UU_DR4344_PJ0526_20L	498,569.00
028619	6/5/2024	Willdan Inc.	Traffic Eng Services - May 2024	175.00
ACH-550	6/1/2024	CalPERS	PERS Health Preium for June 2024	13,250.29
ACH-551	4/30/2024	CalPERS	PERS Retirement Payroll Ending 04-30-24 Retro	152.89
ACH-552	5/14/2024	CalPERS	PERS Retirement Payroll Ending 05-14-24	3,879.75
ACH-553	6/1/2024	Delta Dental	Dental Coverage for June 2024	1,084.38
ACH-554	6/1/2024	Forum Info-Tech. Inc./Levelcloud	June 2024 Cloud Hosting	5,288.65
ACH-555	6/1/2024	Nextiva	Business Phone Service for June 2024	289.16
ACH-556	5/23/2024	Pacific Premier Bank / FNBO	Pacific Premier Cred Card Stmt May 2024 #0306	2,226.59
ACH-557	5/23/2024	Pacific Premier Bank / FNBO	Pacific Premier Cred Card Stmt May 2024 #5550	1,399.44
ACH-558	5/15/2024	Southern California Edison	Electricity usage 04-17-24 to 05-15-24 Acct#4218	316.36
ACH-559	5/21/2024	Southern California Edison	Electricity usage 04-23-24 to 05-21-24 ACCT#8030	694.66
ACH-560	5/14/2024	Vantagepoint Transfer Agents - 306580	Deferred Comp Contributions PR Ending 05-14-24	1,883.58
ACH-561	5/31/2024	Xpress Bill Pay	Online Bill Pay Service Maintenance and Support	35.00

PR LINK	5/17/2024	PR LINK - Payroll & PR Taxes PR#10	Payroll Processing Fee PR#10_05/01/24 - 05/14/24	77.71
PR LINK	5/17/2024	PR LINK - Payroll & PR Taxes PR#10	Pay Period PR#10_05/01/24 - 05/14/24	23,626.62
REPORT TOTAL				**656,029.71**

I, Karina Banales, City Manager of Rolling Hills, California certify that the above demands are accurate and there is available in the General Fund a balance of
$ 656,029.71 for the payment of above items.

Karina Banales, City Manager

City of Rolling Hills INCORPORATED JANUARY 24, 1957

Agenda Item No.: 8.E
Mtg. Date: 06/10/2024

TO: **HONORABLE MAYOR AND MEMBERS OF THE CITY COUNCIL**

FROM: **CHRISTIAN HORVATH, CITY CLERK / EXECUTIVE ASSISTANT TO CITY MANAGER**

THRU: **KARINA BAÑALES, CITY MANAGER**

SUBJECT: **REPUBLIC SERVICES RECYCLING TONNAGE AND COMPLAINT REPORTS FOR APRIL 2024**

DATE: **June 10, 2024**

BACKGROUND:
Please note that Republic has been asked to provide footnotes per Council direction. They will try to accommodate on future reports.

DISCUSSION:
None.

FISCAL IMPACT:
None.

RECOMMENDATION:
Receive and file.

ATTACHMENTS:
VC_REP_240521_April_YTD_TonnageReport.pdf
VC_REP_240521_April_C&D_Report.pdf
VC_REP_240521_April_CallLog_Redacted.pdf
VC_REP_240528_April_ComplaintsList2024_F_Redacted.pdf
VC_REP_240528_April_RedTagList.pdf

CITY OF ROLLING HILLS RESIDENTIAL FRANCHISE

2024

Year 2024
Franchise Y/N Y

Month	Commodity	Tons Collected	Tons Recovered	Tons Disposed	Diversion %
1	Greenwaste	79.86	79.86	-	100.00%
	Trash	247.10	-	247.10	0.00%
1 Total		326.96	79.86	247.10	24.43%
2	Greenwaste	51.72	51.72	-	100.00%
	Trash	198.13	-	198.13	0.00%
2 Total		249.85	51.72	198.13	20.70%
3	Greenwaste	53.42	53.42	-	100.00%
	Trash	199.60	-	199.60	0.00%
3 Total		253.02	53.42	199.60	21.11%
4	Greenwaste	116.50	116.50	-	100.00%
	Trash	183.05	-	183.05	0.00%
	Trash - Free Residential Roll Off Bin	3.76	-	3.76	0.00%
4 Total		303.31	116.50	186.81	38.41%
Grand Total		1,133.14	301.50	831.64	26.61%

CITY OF ROLLING HILLS NON-FRANCHISE

2024

Year 2024
Franchise Y/N N

Month	Commodity	Tons Collected	Tons Recovered	Tons Disposed	Diversion %
1	Greenwaste	19.61	19.61	-	100.00%
	Recycle	0.27	0.04	0.23	15.00%
	Trash	59.97	-	59.97	0.00%
	Organics	0.16	0.10	0.06	61.71%
	C&D	4.27	3.43	0.84	80.24%
1 Total		84.29	23.18	61.11	27.50%
2	Greenwaste	16.94	16.94	-	100.00%
	Recycle	0.29	0.11	0.18	37.67%
	Trash	57.05	-	57.05	0.00%
	C&D	11.29	9.05	2.25	80.10%
2 Total		85.57	26.09	59.47	30.50%
3	Greenwaste	6.42	6.42	-	100.00%
	Recycle	0.22	0.08	0.13	38.48%
	Trash	35.05	-	35.05	0.00%
3 Total		41.69	6.50	35.19	15.60%
4	Greenwaste	11.07	11.07	-	100.00%
	Recycle	0.27	0.11	0.16	40.00%
	Trash	46.40	-	46.40	0.00%
4 Total		57.74	11.18	46.56	19.36%
Grand Total		269.28	66.95	202.33	24.86%

Republic Services
C&D Report

City of Rolling Hills
Reporting Period April-24

Disposal Site	Material	Loads Taken	Tons Collected
No C&D to Report			

Summary	
Row Labels	**Sum of Tons Collected**
(blank)	
Grand Total	

Republic Services Call Log Report

City: Rolling Hills

Year 2024

Month/Quarter 4

Summary of Calls by Type		
Final Call		
Final Call Type	**Sub-Type**	**Total**
2.Complaint	Escalation	1
2.Complaint Total		**1**
3.Missed Pick Up	Missed Recycle - Residential	2
	Missed Trash - Residential	7
	Missed Yard Waste - Residential	4
3.Missed Pick Up Total		**13**
Grand Total		**14**

Republic Services Call Log Report

Final Call Type	Sub-Type	Case Number	Date/Time Opened	Date/Time Closed	Created By	Request Description	Resolution Comments	Customer Category	Account Number	Site	Account Name	Site Address	Phone
2.Complaint	Escalation	20240409-191041727	4/9/2024 3:19 PM	4/9/2024 4:51 PM	SARAH HONER	Lulu Akino (424) 206-9824 called to report an issue. cx needs a driver to return for service today the driver serviced her neighbors but left her carts behind this is the second week this has happened and she says it happened a few weeks ago as well pleas	on schedule for 4/11/2024...rh	RESI	9020003567	1	CURRENT RESIDENT	29 EASTFIELD DR ROLLING HILLS CA	(000) 000-0000
3.Missed Pick Up	Missed Recycle - Residential	20240409-191002037	4/9/2024 10:32 AM	4/9/2024 3:53 PM	Joanne Solis	(blank)	(blank)	RESI	9020003487	1	CURRENT RESIDENT	30 CREST RD E ROLLING HILLS CA	(000) 000-0000
3.Missed Pick Up	Missed Recycle - Residential	20240430-192342395	4/30/2024 8:53 AM	4/30/2024 11:15 PM	Christian Salvador Cacho	(blank)	(blank)	RESI	9020003653	1	CURRENT RESIDENT	9 GEORGEFF RD ROLLING HILLS CA	[redacted]
3.Missed Pick Up	Missed Trash - Residential	20240409-191041494	4/9/2024 3:16 PM	4/9/2024 3:53 PM	SARAH HONER	(blank)	(blank)	RESI	9020003567	1	CURRENT RESIDENT	29 EASTFIELD DR ROLLING HILLS CA	(000) 000-0000
3.Missed Pick Up	Missed Trash - Residential	20240410-191134464	4/10/2024 3:54 PM	4/10/2024 3:56 PM	Daniel Ramon Ochoa	(blank)	(blank)	RESI	9020003082	1	CURRENT RESIDENT	0 BUGGY WHIP DR ROLLING HILLS CA	(000) 000-0000

Republic Services Call Log Report

Final Call Type	Sub-Type	Case Number	Date/Time Opened	Date/Time Closed	Created By	Request Description	Resolution Comments	Customer Category	Account Number	Site	Account Name	Site Address	Phone
3.Missed Pick Up	Missed Trash - Residential	20240416-191498247	4/16/2024 3:57 PM	4/19/2024 10:44 PM	Rechelle Bradford	(blank)	(blank)	RESI	9020003348	1	CURRENT RESIDENT	38 CHUCKWAGON RD ROLLING HILLS CA	(000) 000-0000
3.Missed Pick Up	Missed Trash - Residential	20240412-191261952	4/12/2024 9:55 AM	4/16/2024 10:46 PM	Joel Alfredo Inzunza	(blank)	(blank)	RESI	9020003617	1	RESIDENT	85 EASTFIELD DR ROLLING HILLS CA	[redacted]
3.Missed Pick Up	Missed Trash - Residential	20240413-191311658	4/13/2024 11:09 AM	4/17/2024 10:46 PM	Brieana Smith	(blank)	(blank)	RESI	9020003355	1	CURRENT RESIDENT	44 CHUCKWAGON RD ROLLING HILLS CA	(000) 000-0000
3.Missed Pick Up	Missed Trash - Residential	20240412-191303091	4/12/2024 3:15 PM	4/16/2024 10:46 PM	Lanisha Reed	(blank)	(blank)	RESI	9020003036	1	CURRENT RESIDENT	4 BOWIE RD ROLLING HILLS CA	[redacted]
3.Missed Pick Up	Missed Trash - Residential	20240430-192342279	4/30/2024 8:52 AM	4/30/2024 11:15 PM	Christian Salvador Cacho	(blank)	(blank)	RESI	9020003653	1	CURRENT RESIDENT	9 GEORGEFF RD ROLLING HILLS CA	[redacted]
3.Missed Pick Up	Missed Yard Waste - Residential	20240424-191970225	4/24/2024 8:03 AM	4/26/2024 10:45 PM	Manuel Alfredo Hernandez	(blank)	(blank)	RESI	9020003082	1	CURRENT RESIDENT	0 BUGGY WHIP DR ROLLING HILLS CA	(000) 000-0000

Republic Services Call Log Report

Final Call Type	Sub-Type	Case Number	Date/Time Opened	Date/Time Closed	Created By	Request Description	Resolution Comments	Customer Category	Account Number	Site	Account Name	Site Address	Phone
3.Missed Pick Up	Missed Yard Waste - Residential	20240412-191262215	4/12/2024 9:57 AM	4/16/2024 10:46 PM	Joel Alfredo Inzunza	(blank)	(blank)	RESI	9020003617	1	RESIDENT	85 EASTFIELD DR ROLLING HILLS CA	[redacted]
3.Missed Pick Up	Missed Yard Waste - Residential	20240409-191002137	4/9/2024 10:33 AM	4/9/2024 3:54 PM	Joanne Solis	(blank)	(blank)	RESI	9020003487	1	CURRENT RESIDENT	30 CREST RD E ROLLING HILLS CA	(000) 000-0000
3.Missed Pick Up	Missed Yard Waste - Residential	20240430-192342479	4/30/2024 8:54 AM	4/30/2024 11:15 PM	Christian Salvador Cacho	(blank)	(blank)	RESI	9020003653	1	CURRENT RESIDENT	9 GEORGEFF RD ROLLING HILLS CA	[redacted]

City of Rolling Hills Republic Complaint Log - April 2024

Date of Issue	Time	Issue/Complaint	Resident Name	Resident Address	Republic contacted	Republic Reponse	Date Reponse	Time of Reponse	Resolved
4/2/2024	9:00AM	Missed Green Waste on Friday	[redacted]	73 Portuguese Bend Rd.	Addrian Orssten	Miguel Ruiz	4/2/2024	4:00PM	yes
4/2/2024	2:15PM	Missed Regular Trash Pickup on Friday		27 Eastfield Dr.	Miguel Ruiz	Miguel Ruiz	4/2/2024	4:00PM	yes
4/2/2024	4:57PM	Missed Regular Trash Pickup on Friday		25 Eastfield Dr.	Miguel Ruiz	Miguel Ruiz	4/2/2024	5:00PM	yes
4/5/2024	8:40AM	Missed Regular Trash Pickup on Thursday		7 Middleridge Ln. N	Miguel Ruiz	Miguel Ruiz	4/5/2024	3:09PM	yes
4/5/2024	9:06AM	Missed Regular Trash Pickup on Thursday		7 Buggywhip Dr.	Miguel Ruiz	Miguel Ruiz	4/5/2024	3:09PM	yes
4/5/2024	3:21PM	Missed Regular Trash Pickup		3 Eastfield Dr.	Miguel Ruiz	Miguel Ruiz	4/5/2024	4:37PM	yes
4/5/2024	4:26PM	Missed Regular Trash pickup		15 Eastfield Dr.	Miguel Ruiz	Miguel Ruiz	4/5/2024	4:37PM	yes
4/8/2024	10:01AM	Missed Regular Trash Pickup		14 Upper Blackwater Cyn.	Tanasha Malone	Tanasha Malone	4/8/2024	10:22AM	yes
4/10/2024	9:35AM	Missed Regular Trash Pickup Thurs and Mon		20 Crest Rd. E	Tanasha Malone	Tanasha Malone	4/10/2024	9:57AM	yes
4/12/2024	12:41PM	Missed Regular Trash pickup & Greenwaste		85 Eastfield Dr.	Tanasha Malone	Tanasha Malone	4/12/2024	12:51PM	yes
4/12/2024	12:54PM	Missed Trash and Greenwaste		1 Appaloosa Ln.	Tanasha Malone	Tanasha Malone	4/12/2024	1:11PM	yes
4/12/2024	5:00PM	Frequently Missed Trash Pickup		15 Eastfield Dr.	Tanasha Malone	Tanasha Malone	No Response	No Response	no
4/12/2024	3:53PM	Missed Trash & Greenwaste		1 HummingBird Ln.	Tanasha Malone	Tanasha Malone	No Response	No Response	no
4/15/2024	8:41AM	Frequently Missed Trash & Greenwaste		15 Eastfield Dr.	Tanasha Malone	Tanasha Malone	4/15/2024	4/15/2024	yes
4/15/2024	8:41AM	Missed Trash & Greenwaste		1 Humminbird Ln.	Tanasha Malone	Tanasha Malone	4/15/2024	4/16/2024	no
4/15/2024	3:40PM	Missed Trash & Greenwaste		1 Hummingbird Ln.	Tanasha Malone	Tanasha Malone	4/15/2024	4/16/2024	yes
4/15/2024	2:10PM	Missed Trash &Greenwaste		4 Appaloosa Lane	Tanasha Malone	Tanasha Malone	4/15/2024	4/15/2024	yes
4/16/2024	1:07PM	Missed Trash Pickup Since Last Week		87 Eastfield Dr.	Tanasha Malone	Tanasha Malone	4/16/2024	1:12PM	yes
4/16/2024	1:18PM	Missed Trash Pickup Since Last week		Caballeros Ring on Poppytrail	Tanasha Malone	Tanasha Malone	4/16/2024	1:41PM	yes
4/16/2024	2:05PM	Missed Trash Pickup Since Last Week		9 Eastfield Dr.	Tanasha Malone	Tanasha Malone	No Response	No Response	yes
4/16/2024	2:23PM	Missed Trash Pickup Since Last Week		3 Eastfield Dr.	Tanasha Malone	Tanasha Malone	No Response	No Response	yes
4/16/2024	3:01 PM	Missed Trash Pickup		44 Chuckwagon	Tanasha Malone	Tanasha Malone	No Response	No Response	yes
4/17/2024	2:54PM	Missed Trash Pickup		32 Portuguese Bend Rd.	Tanasha Malone	Tanasha Malone	No Response	No Response	yes
4/18/2024	2:07PM	Missed Trash Pickup Again		32 Portuguese Bend Rd.	Tanasha Malone	Tanasha Malone	No Response	No Response	yes
4/19/2024	2:40PM	Missed Trash Pickup		36 Eastfield Dr.	Tanasha Malone	Tanasha Malone	No Response	No Response	yes
4/22/2024	11:06AM	Missed Trash Pickup		25 Chuckwagon Rd.	Tanasha Malone	Tanasha Malone	No Response	No Response	yes
4/22/2024	3:49PM	Missed Trash Pickup		2724 P.V Dr. N.	Tanasha Malone	Tanasha Malone	4/23/2024	12:54PM	yes
4/23/2024	11:01AM	Missed Regular Trash Pickup		2738 PV Dr. N	Tanasha Malone	Tanasha Malone	4/23/2024	12:54PM	yes
4/24/2024	8:30AM	Missed Green Waste Pickup For 2 Weeks		0 Buggy Whip Drive	Tanasha Malone	Tanasha Malone	4/24/2024	11:01AM	yes
4/26/2024	12:38PM	Missed Green Waste		63 Crest Rd. E.	Tanasha Malone	Tanasha Malone	4/26/2024	3:24PM	yes

City of Rolling Hills Republic Red Tag List - April 2024

Republic Services - Red Tag List

Date of Issue	Time	Issue	Resident Name	Resident Address	Republic contacted	Republic Reponse	Date Reponse	Time of Reponse	Resolved
4/22/2024		Red Tag: Green Waste Overload/ Not Bundled	Resident		Tanasha Malone	Tanasha Malone	4/22/2024		yes

City of Rolling Hills INCORPORATED JANUARY 24, 1957

Agenda Item No.: 8.F
Mtg. Date: 06/10/2024

TO: **HONORABLE MAYOR AND MEMBERS OF THE CITY COUNCIL**

FROM: **CHRISTIAN HORVATH, CITY CLERK / EXECUTIVE ASSISTANT TO CITY MANAGER**

THRU: **KARINA BAÑALES, CITY MANAGER**

SUBJECT: **APPROVE THE FOLLOWING STANDING COMMITTEE MINUTES: JANUARY 12, 2024 SOLID WASTE & RECYCLING COMMITTEE SPECIAL MEETING MARCH 11, 2024 AND MAY 6, 2024 FINANCE, BUDGET, AND AUDIT COMMITTEE REGULAR MEETINGS**

DATE: **June 10, 2024**

BACKGROUND:
It appears that historically, City staff has not kept official minutes of standing committee meetings that fall within the requirements of the Brown Act. The City Clerk's department recently started rectifying this situation with the Solid Waste & Recycling Committee prior to reconstituting it as an ad hoc committee. Since that body will no longer meet and approve its minutes under consent, its final meeting is attached for approval by the City Council.

Likewise, the two recent Finance/Budget/Audit Committee meeting minutes are attached for approval by the Council since they will not meet again until after the 2025 Budget calendar is created next January.

Staff will continue to bring minutes before the standing committee meeting bodies unless they are no longer scheduled to meet in a calendar year, at which time they will then be brought before the City Council for approval.

DISCUSSION:
None.

FISCAL IMPACT:
None.

RECOMMENDATION:
Approve as presented.

ATTACHMENTS:
CL_MIN_231012_SWR_F.pdf
CL_MIN_240311_FBA_F.pdf
CL_MIN_240506_FBA_F.pdf

Minutes
Rolling Hills Solid Waste & Recycling Committee
Friday, January 12, 2024
Special Meeting 4:00 p.m.

1. CALL TO ORDER

The Solid Waste & Recycling Committee of the City of Rolling Hills met on the above date at 4:01 p.m.

2. ROLL CALL

Members Present:	Wilson, Mayor Mirsch
Members Absent:	None
Staff Present:	Karina Bañales, City Manager
	Christian Horvath, City Clerk / Executive Assistant to the City Manager

3. PUBLIC COMMENTS ON NON-AGENDA ITEMS – NONE

4. CONSENT CALENDAR

4.A. APPROVE AFFIDAVIT OF POSTING FOR THE SPECIAL SOLID WASTE AND RECYCLING COMMITTEE MEETING OF JANUARY 12, 2024

4.B. APPROVE THE FOLLOWING SOLID WASTE AND RECYCLING COMMITTEE MINUTES: JULY 13, 2023; OCTOBER 3, 2023

Motion by Councilmember Wilson, seconded by Mayor Mirsch to approve Consent Calendar items. Motion carried unanimously with the following vote:

AYES: Wilson, Mayor Mirsch
NOES: None

5. OLD BUSINESS

5.A. DISCUSSION ON UPDATES REGARDING REPUBLIC SERVICES FIELD OPERATION ISSUES AND EXPANSION OF MOTHER TRUCK STAGING SITE LOCATIONS

Presentation by City Manager Karina Bañales
City Clerk / Executive Assistant to the City Manager Christian Horvath

Public Comment: Heidi Mackenbach

Staff presented an update on discussions, meetings and actions taken in the past 6-8 months. The committee asked questions and discussion ensued.

Staff received direction from the committee on the following: continue working with Republic operational issues such as trash trucks breaking down, timely trash collection, responsiveness to resident concerns, monitoring the Republic reporting log, and ensuring it aligns with the City's systems.

The committee also discussed mother truck staging locations and Republic revisiting 2010 council-approved staging locations and investigating potential new locations. Staff reported that effective Monday, January 15, Republic will begin staging their mother truck at eight of the fourteen 2010 City Council-approved staging

locations to be used once a week for half the day. Some will be there in the morning and others in the afternoon.

Mayor Mirsch discussed the potential creation of a “kitchen cabinet” group comprised of herself and some residents to discuss potential solutions to current issues that can be brought back to staff and the Committee for formal discussion.

6. NEW BUSINESS – NONE

7. ITEMS FROM STAFF – NONE

8. ITEMS FROM SOLID WASTE & RECYCLING COMMITTEE – NONE

9. ADJOURNMENT: 5:19 P.M.

The meeting was adjourned at 5:19 p.m.

Respectfully submitted,

_____
Christian Horvath, City Clerk

Approved,

_____
Leah Mirsch, Mayor

Minutes
Rolling Hills Finance/Budget/Audit Committee
Monday, March 11, 2024
Special Meeting 6:00 p.m.

CALL TO ORDER
The Finance/Budget/Audit Committee of the City of Rolling Hills met in person on the above date at 6:04 p.m.

ROLL CALL

Members Present:	Pieper, Black
Members Absent:	None
Staff Present:	Karina Bañales, City Manager
	Robert Samario, Finance Director
	Christian Horvath, City Clerk / Executive Assistant to the City Manager
	John Signo, Planning & Community Services Director

1. CALL TO ORDER

2. ROLL CALL

3. PUBLIC COMMENT ON NON-AGENDA ITEMS – NONE

4. CONSENT CALENDAR

4.A. APPROVE AFFIDAVIT OF POSTING FOR THE SPECIAL FINANCE/BUDGET/AUDIT COMMITTEE MEETING OF MARCH 11, 2024

Motion by Mayor Pro Tem Pieper, seconded by Councilmember Black to approve Consent Calendar. Motion carried unanimously with the following vote:

AYES:	Black, Pieper
NOES:	None
ABSENT:	None

5. DISCUSSION ITEMS

5.A. PRELIMINARY FISCAL YEAR 2024/25 PROJECTIONS AND BALANCING

Presentation by Robert Samario, Finance Director

Motion by Mayor Pro Tem Pieper, seconded by Councilmember Black to receive and file. Motion carried unanimously with the following vote:

AYES:	Black, Pieper
NOES:	None
ABSENT:	None

6. ITEMS FROM THE FINANCE BUDGET AUDIT COMMITTEE – NONE

7. ITEMS FROM STAFF – NONE

8. ADJOURNMENT: 6:26 P.M.

The meeting was adjourned at 6:26 p.m on March 11, 2024. The next regular meeting of the Finance/Budget/Audit Committee is scheduled to be held on Monday, May 6, 2024 beginning at 6:00 p.m. in the City Council Chamber at City Hall, 2 Portuguese Bend Road, Rolling Hills, California. It will also be available via City's website link at: https://www.rolling-hills.org/government/agenda/index.php

All written comments submitted are included in the record and available for public review on the City website.

Respectfully submitted,

_____
Christian Horvath, City Clerk

Approved,

_____
Leah Mirsch, Mayor

Minutes
Rolling Hills Finance/Budget/Audit Committee
Monday, May 6, 2024
Special Meeting 6:00 p.m.

CALL TO ORDER
The Finance/Budget/Audit Committee of the City of Rolling Hills met in person on the above date at 6:30 p.m.

ROLL CALL

Members Present:	Pieper, Black
Members Absent:	None
Staff Present:	Karina Bañales, City Manager
	Robert Samario, Finance Director
	Christian Horvath, City Clerk / Executive Assistant to the City Manager
	John Signo, Planning & Community Services Director

1. CALL TO ORDER

2. ROLL CALL

3. PUBLIC COMMENT ON NON-AGENDA ITEMS – NONE

4. CONSENT CALENDAR

4.A. APPROVE AFFIDAVIT OF POSTING FOR THE SPECIAL FINANCE/BUDGET/AUDIT COMMITTEE MEETING OF MAY 6, 2024

Motion by Mayor Pro Tem Pieper, seconded by Councilmember Black to approve Consent Calendar. Motion carried unanimously with the following vote:

AYES:	Black, Pieper
NOES:	None
ABSENT:	None

5. DISCUSSION ITEMS

5.A. REVIEW OF PROPOSED FISCAL YEAR 2024/25 GENERAL FUND EXPENDITURE BUDGET

Presentation by Robert Samario, Finance Director

Motion by Councilmember Black, seconded by Mayor Pro Tem Pieper to receive and file the report, reduce the City Council expense from $7,500 to $5,000, and use Section 115 Trust Fund monies to make the annual payment to PERS for the UAL. Motion carried unanimously with the following vote:

AYES:	Black, Pieper
NOES:	None
ABSENT:	None

6. ITEMS FROM THE FINANCE BUDGET AUDIT COMMITTEE – NONE

7. ITEMS FROM STAFF – NONE

8. ADJOURNMENT: 7:12 P.M.

The meeting was adjourned at 7:12 p.m on May 6, 2024. The next regular meeting of the Finance/Budget/Audit Committee is to be determined in the City Council Chamber at City Hall, 2 Portuguese Bend Road, Rolling Hills, California. It will also be available via City's website link at: https://www.rolling-hills.org/government/agenda/index.php

All written comments submitted are included in the record and available for public review on the City website.

Respectfully submitted,

_____
Christian Horvath, City Clerk

Approved,

_____
Leah Mirsch, Mayor

Agenda Item No.: 8.G
Mtg. Date: 06/10/2024

TO: **HONORABLE MAYOR AND MEMBERS OF THE CITY COUNCIL**

FROM: **CHRISTIAN HORVATH, CITY CLERK / EXECUTIVE ASSISTANT TO CITY MANAGER**

THRU: **KARINA BAÑALES, CITY MANAGER**

SUBJECT: **ADOPT RESOLUTION NO. 1366, A RESOLUTION OF THE CITY COUNCIL OF THE CITY OF ROLLING HILLS, CALIFORNIA, IN SUPPORT OF THE HOMELESSNESS, DRUG ADDICTION, AND THEFT REDUCTION ACT (INITIATIVE 23-0017A1) FOR TARGETED REFORMS TO PROPOSITION 47**

DATE: **June 10, 2024**

BACKGROUND:

The Homelessness, Drug Addiction, and Theft Reduction Act (23-0017 A1) is a comprehensive legislative proposal meticulously designed to address the complex and interconnected issues of homelessness, drug addiction, and theft within communities. The Act outlines a wide array of strategies and interventions aimed at prevention, treatment, and enforcement to comprehensively address the root causes and consequences of these societal challenges.

Californians for Safer Communities is the official coalition leading the Homelessness, Drug Addiction, and Theft Reduction Act. They are currently collecting signatures for the Act to qualify for the 2024 November General Election. The Act would provide targeted reforms to Proposition 47 that the authors feel legislative proposals alone are unable to deliver.

Proposition 47 Safe Neighborhoods and Schools Act

Proposition 47, also known as the Safe Neighborhoods and Schools Act, was passed by California voters in 2014. It reclassified certain nonviolent offenses, such as drug possession and theft, from felonies to misdemeanors. The intent behind Proposition 47 was to reduce incarceration rates, prioritize rehabilitation, and redirect cost savings to support mental health and drug treatment programs. Since its enactment, Proposition 47 has generated discussion and debate regarding its effectiveness and unintended consequences. Supporters argue that

it has reduced prison overcrowding, provided opportunities for rehabilitation, and promoted fairness in sentencing. However, critics have raised concerns about its impact on public safety, citing an increase in property crimes and challenges related to homelessness and drug addiction.

Homelessness, Drug Addiction, and Theft Reduction Act

A new proposal, called The Homelessness, Drug Addiction and Theft Reduction Act, would amend parts of Proposition 47. The measure aims at reforming laws that have dramatically increased homelessness, drug addiction, and theft throughout California.

The measure proposes to:

- Provide drug and mental health treatment for people who are addicted to hard drugs such as fentanyl, cocaine, heroin, and methamphetamine.
- Add fentanyl to existing laws that prohibit the possession of hard drugs while armed with a loaded firearm.
- Add fentanyl to existing laws that prohibit the trafficking of large quantities of hard drugs.
- Permit judges to use their discretion to sentence drug dealers to state prison instead of county jail when they are convicted of trafficking hard drugs in large quantities or are armed.
- Warn convicted hard drug dealers and manufacturers that they can be charged with murder if they continue to traffic hard drugs, and someone dies as a result.
- Reinstate penalties for hard drug dealers whose trafficking kills or seriously injures a drug user.
- Increase penalties for people who repeatedly engage in theft.
- Introduce new laws to address the increasing problem of "smash and grab" thefts that result in significant losses and damage or are committed by multiple thieves working together.

There is an argument that the leniency currently under Proposition 47 has led to skyrocketing theft in recent years. Under the new proposal, “an offender with two prior convictions for theft can be charged with a felony, regardless of the value of the stolen property.” It would also allow prosecutors to add together the value of property stolen across multiple thefts to exceed the $950.00 threshold for a felony charge and create harsher punishments for organized retail theft rings. Proposition 47 turned most drug possession offenses from felonies to misdemeanors. Right now, non-prescription fentanyl is not listed on Proposition 47 as a hard drug, and the new proposal would create harsher penalties for people who deal fentanyl and other hard drugs.

The Homelessness, Drug Addiction, and Theft Reduction proposal is currently being circulated as a petition. Phase 1 (Qualification), which concludes on April 30, 2024. To qualify the measure for the November 2024 ballot, the law requires 546,651 valid signatures. If the threshold of valid signatures is reached in Phase 2, the initiative will go to California voters in November 2024. As of April 18, 2024, the Californians for Safer Communities, the official

coalition, announced that they had collected over 900,000 signatures.

DISCUSSION:
On May 13, 2024, the City Council approved a provided draft resolution, with modifications, in support of the Homelessness, Drug Addiction, and Theft Reduction Act Initiative 23-0017 A1. The final version is attached to this report.

FISCAL IMPACT:
None.

RECOMMENDATION:
Approve as presented.

ATTACHMENTS:
ResolutionNo1366_StateBallotInitiative_23-0017A1_Support.pdf

RESOLUTION NO. 1366

A RESOLUTION OF THE CITY COUNCIL OF THE CITY OF ROLLING HILLS, CALIFORNIA IN SUPPORT OF THE HOMELESSNESS, DRUG ADDICTION, AND THEFT REDUCTION ACT

THE CITY COUNCIL OF THE CITY OF ROLLING HILLS, CALIFORNIA, DOES HEREBY RESOLVE, DECLARE, DETERMINE, AND ORDER AS FOLLOWS:

WHEREAS: Unintended consequences of Prop 47 include repeat and often organized retail theft, inner-city store closings, and difficulty convincing people to seek drug and mental health treatment.

WHEREAS: These unintended consequences can only be corrected by the voters at the ballot box with modest amendments to Prop 47.

WHEREAS: Initiative 23-0017A1, the Homelessness, Drug Addiction, and Theft Reduction Act is currently collecting signatures to qualify for the 2024 November General Election

WHEREAS: The Homelessness, Drug Addiction, and Theft Reduction Act is a bi-partisan measure that provides common sense, targeted reforms to Prop 47 that legislative proposals alone are unable to deliver.

WHEREAS: Rampant retail theft is harming businesses and residents in California because those who commit these crimes know they'll get away with it, even if they're caught.

WHEREAS: This measure will hold repeat offenders accountable for the safety of our communities, rather than putting them back on the streets.

WHEREAS: The fentanyl crisis has reached alarming levels, and is now responsible for 20 percent of youth deaths in California.

WHEREAS: The Homelessness, Drug Addiction, and Theft Reduction Act will define fentanyl as a hard drug, hold individuals convicted of trafficking fentanyl accountable, and grant Judges greater discretion in sentencing drug traffickers.

WHEREAS: It's time for meaningful reforms to our justice system that ensure our communities are safe.

NOW, THEREFORE, BE IT RESOLVED by the City of Rolling Hills, that the City Council formally expresses support for the Homelessness, Drug

Addiction, and Theft Reduction Act and the benefit that it provides for our community's safety.

PASSED, APPROVED, AND ADOPTED this 10th day of June, 2024

_____
LEAH MIRSCH
MAYOR

ATTEST:

_____
CHRISTIAN HORVATH
CITY CLERK

STATE OF CALIFORNIA)
COUNTY OF LOS ANGELES) §§
CITY OF ROLLING HILLS)

The foregoing Resolution No. 1366 entitled:

A RESOLUTION OF THE CITY COUNCIL OF THE CITY OF ROLLING HILLS. CALIFORNIA IN SUPPORT OF THE HOMELESSNESS, DRUG ADDICTION, AND THEFT REDUCTION ACT

was approved and adopted at a regular meeting of the City Council on the 10th day of June 2024, by the following roll call vote:

AYES:
NOES:
ABSENT:
ABSTAIN:

_____
CHRISTIAN HORVATH
CITY CLERK

Agenda Item No.: 8.H
Mtg. Date: 06/10/2024

TO: **HONORABLE MAYOR AND MEMBERS OF THE CITY COUNCIL**

FROM: **CHRISTIAN HORVATH, CITY CLERK / EXECUTIVE ASSISTANT TO CITY MANAGER**

THRU: **KARINA BAÑALES, CITY MANAGER**

SUBJECT: **ADOPT RESOLUTION NO. 1367, A RESOLUTION OF THE CITY COUNCIL OF THE CITY OF ROLLING HILLS, CALIFORNIA, ASSIGNING ITS AVAILABLE PROPOSITION C TRANSPORTATION FUNDS TO THE CITY OF ROLLING HILLS ESTATES FOR THE REHABILITATION OF DEEP VALLEY DRIVE / DRYBANK DRIVE / INDIAN PEAK ROAD**

DATE: **June 10, 2024**

BACKGROUND:

The City annually receives countywide tax disbursements from Proposition A, Proposition C, Measure R, and Measure M funds to be used for transportation and transit-related purposes. Proposition A and C funds are dedicated to transit and major arterial improvements. They are not eligible for use in Rolling Hills because the roads are privately owned and maintained. Measure R and Measure M funds are eligible for transportation improvement projects on public properties. Historically, the City has solicited interest from other public agencies regarding the exchange of accumulated local return funds for General Fund monies (Proposition A) or donating local return funds towards transit/transportation-related purposes (Proposition C).

These funds have a five-year spend-down period, after which the expiring amount can lapse. Since 2021, the City has accumulated approximately $89,000 in Proposition C Funds. On May 13, 2024, an email was sent to neighboring Peninsula cities inquiring about their interest in donating Proposition C funds.

DISCUSSION:

The City of Rolling Hills Estates (RHE) responded to Rolling Hills' solicitation and is interested in using donated Proposition C funds to help with a capital project that will repair and resurface Deep Valley Drive / Drybank Drive / Indian Peak Road within their commercial

district as it also serves as a transit corridor. Staff recommends gifting of the City's available Proposition C funds to Rolling Hills Estates to supplement the Deep Valley Drive / Drybank Drive / Indian Peak Road project.

FISCAL IMPACT:

PROPOSITION C

Fiscal Year (FY)	Amount	Benefiting Agency	Exchange Rate	General Fund Revenue
2002/2003	$ 46,146.50	RH Estates	N/A	N/A
2002/2003	$ 46,146.50	Rancho PV	N/A	N/A
2005/2006	$ 83,000.00	RH Estates	N/A	N/A
2008/2009	$ 38,174.00	Rancho PV	N/A	N/A
2008/2009	$ 38,174.00	RH Estates	N/A	N/A
2010/2011	$ 9,000.00	RH Estates	N/A	N/A
2010/2011	$ 18,000.00	Rancho PV	N/A	N/A
2010/2011	$ 3,000.00	PVP Transit	N/A	N/A
2012/2013	$ 40,000.00	RH Estates	N/A	N/A
2014/2015	$ 70,000.00	RH Estates	N/A	N/A
2016/2017	$ 65,000.00	RH Estates	N/A	N/A
2018/2019	$ 65,000.00	RH Estates	N/A	N/A
2020/2021	$ 39,000.00	RH Estates	N/A	N/A
2020/2021	$ 26,000.00	Rancho PV	N/A	N/A
2023/2024 Proposed	**$ 89,000.00**	**RH Estates**	**N/A**	**N/A**

RECOMMENDATION:

Approve as presented.

ATTACHMENTS:
ResolutionNo1367_PropC_Funds_RHE_F.pdf

RESOLUTION NO. 1367

A RESOLUTION OF THE CITY COUNCIL OF THE CITY OF ROLLING HILLS, CALIFORNIA ASSIGNING TO THE CITY OF ROLLING HILLS ESTATES ITS AVAILABLE PROPOSITION C TRANSPORTATION FUNDS

WHEREAS, the City of Rolling Hills has a fund balance of approximately $89,000 in Proposition C Local Return Funds for transportation projects; and

WHEREAS, the City of Rolling Hills does not have projects that are eligible for funding with Proposition C Local Return Funds; and

WHEREAS, the City of Rolling Hills Estates has identified projects that qualify for funding with Proposition C Local Return Funds; and

WHEREAS, the City of Rolling Hills has a general interest in supporting eligible projects for transportation, to maintain traffic flow and to improve bicycle and pedestrian facilities on the Palos Verdes Peninsula; and

WHEREAS, the City of Rolling Hills has the specific interest in improving and resurfacing Deep Valley Drive / Drybank Drive / Indian Peak Road located in the commercial district serving the residents of the City of Rolling Hills.

WHEREAS, at this time the City wishes to the allocate Proposition C Local Return Funds to another public agency to be utilized for an eligible use;

NOW, THEREFORE, the City Council of the City of Rolling Hills, California, does hereby resolve as follows:

Section 1. The City of Rolling Hills hereby assigns to the City of Rolling Hills Estates $89,000 in Proposition C Local Return Funds for Deep Valley Drive / Drybank Drive / Indian Peak Road Resurfacing Project.

Section 2. The City Council approves an Agreement for the assignment of said funds. Said Agreement is hereto attached as Exhibit “A” and is made a part hereof by reference.

Section 3. The City of Rolling Hills will submit its documentation for the Los Angeles Metropolitan Transportation Authority to allocate these funds to the City of Rolling Hills Estates for the appropriate eligible programs in the City.

Section 4. The City Clerk shall certify to the adoption of this Resolution and shall forward certified copies to the Los Angeles County Metropolitan Transportation Authority and the City of Rolling Hills Estates.

Section 5. The City Manager is hereby directed and authorized to execute any necessary documents, including, but not limited to agreements, amendments, forms, and applications to follow through with this transfer of funds.

Section 6. The City Clerk, or duly appointed deputy, is directed to attest thereto.

PASSED, APPROVED, AND ADOPTED BY THE CITY COUNCIL OF THE CITY OF ROLLING HILLS ON THIS 10th DAY OF JUNE 2024.

LEAH MIRSCH
MAYOR

ATTEST:

CHRISTIAN HORVATH
CITY CLERK

STATE OF CALIFORNIA)
COUNTY OF LOS ANGELES) §§
CITY OF ROLLING HILLS)

The foregoing Resolution No. 1367 entitled:

A RESOLUTION OF THE CITY COUNCIL OF THE CITY OF ROLLING HILLS, CALIFORNIA ASSIGNING TO THE CITY OF ROLLING HILLS ESTATES ITS AVAILABLE PROPOSITION C TRANSPORTATION FUNDS

was approved and adopted at a regular meeting of the City Council on June 10, 2024 by the following roll call vote:

AYES:
NOES:
ABSENT:
ABSTAIN:

CHRISTIAN HORVATH
CITY CLERK

EXHIBIT A

PROPOSITION C FUNDS ASSIGNMENT AGREEMENT

This Assignment Agreement is made and entered into this 10th day of June, 2024 by and between the City of Rolling Hills and the City of Rolling Hills Estates, with respect to the following facts:

A. The City of Rolling Hills Estates maintains the roadways and plans to resurface Deep Valley Drive / Drybank Drive / Indian Peak Road, located in the commercial district.

B. The City of Rolling Hills has an accumulation of uncommitted Proposition C Local Return funds which could be made available to the City of Rolling Hills Estates to assist in providing the services described in Paragraph A of this Agreement. The City of Rolling Hills is willing to assign uncommitted Proposition C Local Return funds to the City of Rolling Hills Estates for the purpose identified in Paragraph A.

Now, therefore, in consideration of the mutual benefits to be derived by the parties and of the premises herein contained, it is mutually agreed as follows:

1. Gifting.

The City of Rolling Hills agrees to assign $89,000 of its uncommitted Proposition C Local Return funds to the City of Rolling Hills Estates in Fiscal Year 2023/2024.

2. Consideration.

The City of Rolling Hills shall assign the agreed upon Proposition C Local Return funds to the City of Rolling Hills Estates in one payment no later than June 30, 2024.

3. Term.

This Agreement is effective on the date above written and for such time as is necessary for both parties to complete their mutual obligations under this Agreement.

4. Termination.

Termination of this Agreement may be made by either party before the date of approval of the project description covering the funds in question by the Metropolitan Transportation Authority, so long as written notice of intent to terminate is given to the other party at least five (5) days prior to the termination.

5. Notices.

Notices shall be given pursuant to this Agreement by personal service on the party to be notified, or by written notice upon such party deposited in the custody of the United States Postal Service addressed as follows:

a. Karina Bañales, City Manager
City of Rolling Hills
2 Portuguese Bend Road
Rolling Hills, California 90274

b. Greg Grammer, City Manager
City of Rolling Hills Estates
4045 Palos Verdes Drive North
Rolling Hills, California 90274

6. Assurances.

a. The City of Rolling Hills Estates shall use the assigned Proposition C Local Return funds only for the purpose of providing the project discussed in Paragraph A of this Agreement and within the time limits specified in Metropolitan Transportation Authority's Proposition C Local Return Guidelines.

b. Concurrently with the Execution of this Agreement, the City of Rolling Hills Estates shall provide the Metropolitan Transportation Authority with the Standard Assurances and Understandings Regarding Receipt of Use of Proposition C Funds specified in the Guidelines regarding the use of the assigned Proposition C Local Return Funds.

IN WITNESS WHEREOF, the parties hereto have caused this Assignment Agreement to be executed by their respective officers, duly authorized, on the day and year written above.

EXHIBIT A

CITY OF ROLLING HILLS ESTATES

By:_____
Greg Grammer
City Manager

ATTEST

By:_____
Lauren Pettit
City Clerk

APPROVED AS TO FORM:

By:_____
Donald M. Davis
City Attorney

CITY OF ROLLING HILLS

By:_____
Karina Bañales
City Manager

ATTEST:

By:_____
Christian Horvath
City Clerk

By:_____
Patrick Donegan,
City Attorney

City of Rolling Hills INCORPORATED JANUARY 24, 1957

Agenda Item No.: 8.I
Mtg. Date: 06/10/2024

TO: **HONORABLE MAYOR AND MEMBERS OF THE CITY COUNCIL**

FROM: **JOHN SIGNO, DIRECTOR OF PLANNING & COMMUNITY SERVICES**

THRU: **KARINA BAÑALES, CITY MANAGER**

SUBJECT: **REAPPROVE A PROFESSIONAL SERVICES AGREEMENT WITH JTL CONSULTANTS FOR $5,000 PER FISCAL YEAR FOR ON-CALL ARBORIST SERVICES TO SUPPORT STAFF IN FIRE FUEL ABATEMENT CODE ENFORCEMENT CASES**

DATE: **June 10, 2024**

BACKGROUND:

In 2018, the City Council implemented a city-wide pro-active dead vegetation enforcement program. In February 2019, the City Council amended its Fire Fuel Abatement Ordinance (Chapter 8.30 of the RHMC) to include dead trees and shrubs, dead or alive tumbleweeds, dead palm fronds, and other plants as a public nuisance. The City hired a part-time code enforcement officer to implement the proactive enforcement program. There are times when residents dispute staff's determination that a plant is dead, claiming it is dormant or seasonal. The staff's expertise is not in the condition of plants, and thus, an arborist is needed to determine the health of the vegetation in question.

On June 5, 2019, staff released a Request for Proposal (RPF) for arborist services. The scope of work included assisting city staff on an as-needed basis in identifying whether vegetation observed in the field during routine inspection is dead, regardless of the season. The arborist would also make recommendations on how to most effectively remove the vegetation without causing an environmental risk (including but not limited to erosion) and on appropriate replacement vegetation.

On June 20, 2019 two proposals were received from Warriner Associates and JTL Consultants. Proposals were to be selected based on qualifications, licensing, experience, references and cost.

On July 22, 2019, the City Council reviewed the proposals from the two arborists available on an as-needed basis. The responsibility includes helping staff identify dead vegetation and consult on other landscaping matters. Both proposals met the submittal requirements as outlined in the City's RFP. Both proposals were submitted timely and demonstrated relevant

experience and capacity plus the required expertise, certifications, and licenses to perform the work. The arborists were expected to be on call no more than ten times a year, for an amount not to exceed $6,000. The City Council approved both contracts.

DISCUSSION:
The agreements executed in 2019 have both expired. Subsequently, staff reached out to both consultants to see if they are interested in continuing. JTL Consultants is interested and an updated agreement and previous agreement are included as Attachment A and B. Warriner Associates indicated they are no longer in the area and would not be able to serve.

A third arborist, Gregory MacDonald, was used in 2021 for a trees and views case between 59 and 61 Eastfield Drive. Mr. MacDonald was paid $480 for his services. Staff recently reached out to Mr. MacDonald to see if he was still interested in providing services but did not receive a response.

JTL Consultants remains on the City's Preferred Vendors list in case an arborist is needed. The updated agreement with JTL Consultants is identical to the 2019 agreement with the exception of the dates, cost, and reference to a certificate of exemption from workers' compensation insurance to be included as Exhibit B. JTL Consultants has workers' compensation insurance, thus there is no need for the exemption. JTL Consultants will be responsible for assisting in determining whether certain vegetation and trees are dead, recommending effective removal, and recommending replacement. The rate is $200 per hour, representing the total cost for all labor, equipment, supplies, expenses, materials, and travel incurred by the consultant subject to a do not exceed the amount of $5,000 per fiscal year. The contract is valid for one year from execution unless extended in writing by both parties. Either party may terminate the agreement at any time, with or without cause, upon 30 days written notice to the other party.

It's worth noting that the City has rarely utilized arborist services since 2019, and there has been no use since spring 2022. Code enforcement has considered their involvement on several occasions, but the issues were typically resolved before their services were required. In many cases, residents would accept the determination of a tree's condition and remove it themselves. The table below provides a breakdown of the City's arborist costs.

ARBORIST COST SINCE 2019

ARBORIST	AMOUNT	COMMENTS
JTL Consultants	$0	No payments since 2019
Warriner Associates	$4,000	20 hrs.; 2 invoices in 2019; 2 in 2020; 3 in 2021; 1 in 2022
Gregory MacDonald	$480	Trees & Views case in 2021
FIVE-YEAR TOTAL	**$4,800**	

FISCAL IMPACT:
For Fiscal Year (FY) 2023-24, the City budgeted $20,000 in account number 01-15-884 for consulting services, including an arborist. For FY 2024-25, the proposed budget is $5,000, which matches the contract with JTL Consultants.

RECOMMENDATION:
Approve as presented.

ATTACHMENTS:
Exhibit A - CA_AGR_Agrmnt_JTL Consultants -Arborist_20240610_JTL_Signed_F.pdf
Exhibit B - Agrmnt_JTL Consultants -Arborist_2019-07-22.pdf

CITY OF ROLLING HILLS
AGREEMENT FOR ARBORIST SERVICES

THIS AGREEMENT FOR ARBORIST SERVICES ("Agreement") is made and entered into as of June 10, 2024, by and between the CITY OF ROLLING HILLS, a municipal corporation ("City") and JTL CONSULTANTS, LLC. ("Consultant").

R E C I T A L S

A. City desires to retain Consultant to provide on-call consulting services to inspect trees, shrubs, palm fronds, or other plants (herein after referred to as "vegetation") identified by City staff and located in the City of Rolling Hills, evaluate whether such vegetation is dead regardless of the season, prepare a report with Consultant's determination and recommendation, and attend City Council meetings to discuss the report and findings; and

B. Consultant is well qualified by reason of education, certified by the American Society of Consulting Arborists and International Society of Arboriculture, and experience to perform such services; and

C. Consultant is willing to render such services on the terms and conditions as hereinafter defined.

NOW, THEREFORE, in consideration of the foregoing and the covenants and agreements set forth below, City and Consultant agree as follows:

1. Services. Consultant shall perform all work necessary to complete in a manner reasonably satisfactory to City the services set forth in the scope of work attached hereto as Exhibit A and incorporated herein by reference (hereinafter referred to as "Services").

2. Payment. City shall pay Consultant on an hourly basis at the rate of $200.00 per hour, representing total cost for all labor, equipment, supplies, expenses, materials, and travel incurred by Consultant subject to a do not exceed amount in the amount of $5,000.00 per fiscal year. Any services and compensation not provided for in this Agreement may be authorized by City in writing and in advance. Consultant shall submit invoices at the conclusion of each inspection project and City will make payment for all work performed to City's reasonable satisfaction within 30 days of receipt of an invoice.

3. Term and Termination. This contract shall be valid for one year from execution of this Agreement, unless extended in writing by both parties. Either party may terminate this Agreement at any time, with or without cause, upon thirty (30) days' written notice to the other party in compliance with Section13 of this Agreement. In such event, City shall compensate Consultant for all work City reasonably determines to be satisfactorily completed up to the date of termination.

4. Insurance. Without limiting Consultant's obligations arising under paragraph 5 - Indemnity, Consultant shall not begin work under this Agreement until it obtains policies of insurance required under this section. The insurance shall cover Consultant, its agents, representatives, and employees in connection with the performance of work under this Agreement, and shall be maintained throughout the term of this Agreement. Insurance coverage shall be as follows:

A. General Liability Insurance insuring City of Rolling Hills, its elected and appointed officers, agents, and employees from claims for damages for personal injury, including death, as well as from claims for property damage which may arise from Consultant's actions under this Agreement, whether or not done by Consultant or anyone directly or indirectly employed by Consultant. Such insurance shall have a combined single limit of not less than $1,000,000.

B. Automobile Liability Insurance covering bodily injury and property damage for all activities of the Consultant arising out of or in connection with the work to be performed under this Agreement in an amount of not less than $1,000,000 combined single limit for each occurrence. If Consultant or Consultant's employees will use personal automobiles in any way on this project, Consultant shall obtain evidence of personal automobile liability coverage for each such person.

C. Worker's Compensation Insurance for all Consultant's employees to the extent required by the State of California. If the Consultant has no employees for the purposes of this Agreement, the Consultant shall sign the "Certificate of Exemption from Workers' Compensation Insurance."

D. Professional Liability Coverage for professional errors and omissions liability insurance for protection against claims alleging negligent acts, errors, or omissions which may arise from the Consultant's operations under this Agreement, whether such operations are by the Consultant or by its employees, subcontractors, or subconsultants. The amount of this insurance shall not be less than one million dollars ($1,000,000) on a claims-made annual aggregate basis, or a combined single-limit-per-occurrence basis. When coverage is provided on a "claims made basis," Consultant will continue to renew the insurance for a period of three (3) years after this Agreement expires or is terminated. Such insurance will have the same coverage and limits as the policy that was in effect during the term of this Agreement, and will cover Consultant for all claims made by City arising out of any errors or omissions of Consultant, or its officers, employees, or agents during the time this Agreement was in effect.

E. Deductibility Limits for policies referred to in subparagraphs A and B shall not exceed $5,000 per occurrence.

F. Additional Insured. City of Rolling Hills, its elected and appointed officers, agents, and employees shall be named as additional insureds on policies referred to in subparagraphs A and B.

G. Primary Insurance. The insurance required in paragraphs A and B shall be primary and not excess coverage.

H. Evidence of Insurance. Consultant shall furnish City, prior to the execution of this Agreement satisfactory evidence of the insurance required issued by an insurer authorized to do business in California, and an endorsement to each such policy of insurance evidencing that each carrier is required to give City at least 30 days prior written notice of the cancellation of any policy during the effective period of the Agreement. All required insurance policies are subject to approval of the City Attorney. Failure on the part of Consultant to procure or maintain said insurance in full force and effect shall constitute a material breach of this Agreement or procure or renew such insurance, and pay any premiums therefore at Consultant's expense.

5. Indemnity. City agrees to indemnify, hold harmless, and defend at its expense Consultant from any and all claims, actions, losses, damages, charges, expenses, or attorneys' fees to which Consultant may be subject arising out of or resulting from the conclusions and recommendations set forth in any report prepared pursuant to this Agreement. Notwithstanding the foregoing, the City's obligation under this Section shall not apply to any punitive or exemplary damages which may be awarded by a court against Consultant; nor shall this paragraph apply to liability incurred by Consultant for actions outside the Services or which result from wrongful or malicious conduct or negligence, or through the use of any personal vehicle, all as to which Consultant shall indemnify and hold City, its officers, agents, and employees harmless.

6. Quality of Work Performed. All work shall be performed to the highest professional standards.

7. Personnel. Consultant shall not subcontract the Services set forth in this Agreement, unless first obtaining written authorization from the City.

8. Compliance with All Laws. Consultant shall comply with all City, State, and Federal laws in the performance of its Services.

9. Assignment. This Agreement is not assignable nor the performance of either party's duties delegable without the prior written consent of the other party. Any attempted or purported assignment or delegation of any of the rights or obligations of either party without the prior written consent of the other shall be void and of no force and effect.

10. Attorney's Fees. In any action brought to declare the rights granted herein or to enforce any of the terms of this Agreement, the prevailing party shall be entitled to an award of reasonable attorney's fees in an amount determined by the court.

11. Non-discrimination. Consultant shall not discriminate in the hiring of employees or subconsultants on any basis prohibited by law.

12. Independent Contractor. Consultant is and shall at all times remain as to City, a wholly independent contractor. Neither City nor any of its agents shall have control of the conduct of Consultant or any of the Consultant's employees, except as herein set forth. Consultant shall not at any time or in any manner represent that it or any of its agents or employees are in any manner agents or employees of the City. Consultant shall be solely responsible for all contributions, payments, or withholdings normally made on behalf of an employee including but not limited to, state and federal income taxes, federal social security contributions, California State disability insurance taxes, and unemployment insurance contributions. City shall issue Consultant a Form 1099 in connection with the compensation paid hereunder, and Consultant shall pay all required taxes on amounts paid hereunder.

13. Notices. All notices and communications shall be sent to the parties at the following addresses:

CITY: City Manager
City of Rolling Hills
2 Portuguese Bend Road
Rolling Hills, California 90274

CONSULTANT: JTL Consultants, LLC
952 Buena Vista Street
Duarte, CA 91010.

14. Conflict of Interest. Consultant affirms and warrants that he has no financial, contractual, or other interest or obligation that conflicts with or is harmful to the performance of his obligations under this Agreement. Consultant shall not during the term of this Agreement knowingly obtain such an interest or incur such an obligation.

15. Authorized Signature. Consultant affirms that the signatures, titles, and seals set forth hereinafter in execution of this Agreement represents all individuals, firm members, partners, joint ventures, and/or corporate officers having a principal interest herein.

16. Entire Agreement; Modification. This Agreement supersedes any and all other agreements, either oral or written, between the parties and contains all of the covenants and agreements between the parties. Each party to this Agreement acknowledges that no representations, inducements, promises, or agreements, orally or otherwise, have been made by any party, or anyone acting on behalf of any party, which are not embodied herein, and that any other agreement, statements, or promise not contained in this Agreement shall not be valid or binding. Any modification of this Agreement will be effective only if made in advance, in writing, and signed by both parties. The parties acknowledge and agree that their respective obligations under the Agreement have been fully discharged.

IN WITNESS WHEREOF, the parties hereto have executed this AGREEMENT on the date and year first above written.

CITY OF ROLLING HILLS

CITY MANAGER

_____

DATE:_____

ATTEST:

_____
CITY CLERK

APPROVED AS TO FORM:

_____
PATRICK DONEGAN, CITY ATTORNEY

CONSULTANT: JTL CONSULTANTS, LLC
Ted Lubeshkoff, Consulting Arborist

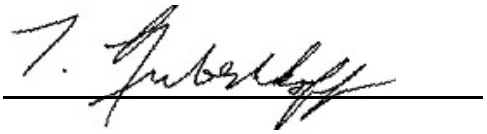

DATE: 6/5/24

EXHIBIT A

SCOPE OF WORK

The City of Rolling Hills is located in the Very High Fire Hazard Severity Zone, as designated by CalFire in 2007. In order to minimize wildfires in the City, the City Council adopted a Fire Fuel Abatement Ordinance (Municipal Code Chapter 8.30), requiring that "every person who owns or is in possession of any property, place, or area within the boundaries of the City shall, at his or her own expense, maintain the property, place or area free from any dead or alive tumbleweed or dead tree, shrub, palm frond or other plant." At this time, this ordinance is not applicable to slopes greater than 2:1 in gradient. The City's ordinance requires that the trees, shrubs, palm fronds, or other plants ("vegetation") must be entirely dead and not in a condition of dying in order to make the determination.

Consultant shall be available to City staff, on an on-call, as needed basis, to assist City staff in identifying if vegetation observed in the field during routine inspections is dead, regardless of the season. Consultant shall evaluate the vegetation and, if dead, recommend how to most effectively remove the vegetation, without causing an environmental risk (including but not limited to erosion) and appropriate replacement vegetation, and prepare a report to the City with Consultant's determination and recommendation. Consultant shall also attend City Council meetings on an as-needed basis as an expert resource upon two weeks' notice of the City Council meeting.

CITY OF ROLLING HILLS
AGREEMENT FOR ARBORIST SERVICES

THIS AGREEMENT FOR ARBORIST SERVICES ("Agreement") is made and entered into as of July 24, 2019, by and between the CITY OF ROLLING HILLS, a municipal corporation ("City") and JTL CONSULTANTS, LLC. ("Consultant").

R E C I T A L S

A. City desires to retain Consultant to inspect trees, shrubs, palm fronds, or other plants (herein after referred to as "vegetation") identified by City staff and located in the City of Rolling Hills, evaluate whether such vegetation is dead regardless of the season, prepare a report with Consultant's determination and recommendation, and attend City Council meetings to discuss the report and findings; and

B. Consultant is well qualified by reason of education, licensure by the International Society of Arboriculture, and experience to perform such services; and

C. Consultant is willing to render such services on the terms and conditions as hereinafter defined.

NOW, THEREFORE, in consideration of the foregoing and the covenants and agreements set forth below, City and Consultant agree as follows:

1. Services. Consultant shall perform all work necessary to complete in a manner reasonably satisfactory to City the services set forth in the scope of work attached hereto as Exhibit A and incorporated herein by reference (hereinafter referred to as "Services").

2. Payment. City shall pay Consultant on an hourly basis at the rate of $200.00 per hour, representing total cost for all labor, equipment, supplies, expenses, materials, and travel incurred by Consultant subject to a do not exceed amount in the amount of $6,000. Any services and compensation not provided for in this Agreement may be authorized by City in writing and in advance. Consultant shall submit invoices at the conclusion of each inspection project and City will make payment for all work performed to City's reasonable satisfaction within 30 days of receipt of an invoice.

3. Term and Termination. This contract shall be valid for one year from execution of this Agreement, unless extended in writing by both parties. Either party may terminate this Agreement at any time, with or without cause, upon thirty (30) days' written notice to the other party in compliance with Section13 of this Agreement. In such event, City shall compensate Consultant for all work City reasonably determines to be satisfactorily completed up to the date of termination.

4. Insurance. Without limiting Consultant's obligations arising under paragraph 5 - Indemnity, Consultant shall not begin work under this Agreement until it obtains policies of insurance required under this section. The insurance shall cover Consultant, its agents, representatives, and employees in connection with the performance of work under this Agreement, and shall be maintained throughout the term of this Agreement. Insurance coverage shall be as follows:

A. General Liability Insurance insuring City of Rolling Hills, its elected and appointed officers, agents, and employees from claims for damages for personal injury, including death, as well as from claims for property damage which may arise from Consultant's actions under this Agreement, whether or not done by Consultant or anyone directly or indirectly employed by Consultant. Such insurance shall have a combined single limit of not less than $1,000,000.

B. Automobile Liability Insurance covering bodily injury and property damage for all activities of the Consultant arising out of or in connection with the work to be performed under this Agreement in an amount of not less than $300,000 combined single limit for each occurrence. If Consultant or Consultant's employees will use personal automobiles in any way on this project, Consultant shall obtain evidence of personal automobile liability coverage for each such person.

C. Worker's Compensation Insurance for all Consultant's employees to the extent required by the State of California. If the Consultant has no employees for the purposes of this Agreement, the Consultant shall sign the "Certificate of Exemption from Workers' Compensation Insurance" which is attached hereto and incorporated herein by reference as "Exhibit B."

D. Professional Liability Coverage for professional errors and omissions liability insurance for protection against claims alleging negligent acts, errors, or omissions which may arise from the Consultant's operations under this Agreement, whether such operations are by the Consultant or by its employees, subcontractors, or subconsultants. The amount of this insurance shall not be less than one million dollars ($1,000,000) on a claims-made annual aggregate basis, or a combined single-limit-per-occurrence basis. When coverage is provided on a "claims made basis," Consultant will continue to renew the insurance for a period of three (3) years after this Agreement expires or is terminated. Such insurance will have the same coverage and limits as the policy that was in effect during the term of this Agreement, and will cover Consultant for all claims made by City arising out of any errors or omissions of Consultant, or its officers, employees, or agents during the time this Agreement was in effect.

E. Deductibility Limits for policies referred to in subparagraphs A and B shall not exceed $5,000 per occurrence.

F. Additional Insured. City of Rolling Hills, its elected and appointed officers, agents, and employees shall be named as additional insureds on policies referred to in subparagraphs A and B.

G. Primary Insurance. The insurance required in paragraphs A and B shall be primary and not excess coverage.

H. Evidence of Insurance. Consultant shall furnish City, prior to the execution of this Agreement satisfactory evidence of the insurance required issued by an insurer authorized to do business in California, and an endorsement to each such policy of insurance evidencing that each carrier is required to give City at least 30 days prior written notice of the cancellation of any policy during the effective period of the Agreement. All required insurance policies are subject to approval of the City Attorney. Failure on the part of Consultant to procure or maintain said insurance in full force and effect shall constitute a material breach of this Agreement or procure or renew such insurance, and pay any premiums therefore at Consultant's expense.

5. Indemnity. City agrees to indemnify, hold harmless, and defend at its expense Consultant from any and all claims, actions, losses, damages, charges, expenses, or attorneys' fees to which Consultant may be subject arising out of or resulting from the conclusions and recommendations set forth in any report prepared pursuant to this Agreement. Notwithstanding the foregoing, the City's obligation under this Section shall not apply to any punitive or exemplary damages which may be awarded by a court against Consultant; nor shall this paragraph apply to liability incurred by Consultant for actions outside the Services or which result from wrongful or malicious conduct or negligence, or through the use of any personal vehicle, all as to which Consultant shall indemnify and hold City, its officers, agents, and employees harmless.

6. Quality of Work Performed. All work shall be performed to the highest professional standards.

7. Personnel. Consultant shall not subcontract the Services set forth in this Agreement.

8. Compliance with All Laws. Consultant shall comply with all City, State, and Federal laws in the performance of its Services.

9. Assignment. This Agreement is not assignable nor the performance of either party's duties delegable without the prior written consent of the other party. Any attempted or purported assignment or delegation of any of the rights or obligations of either party without the prior written consent of the other shall be void and of no force and effect.

10. Attorney's Fees. In any action brought to declare the rights granted herein or to enforce any of the terms of this Agreement, the prevailing party shall be entitled to an award of reasonable attorney's fees in an amount determined by the court.

11. Non-discrimination. Consultant shall not discriminate in the hiring of

employees or subconsultants on any basis prohibited by law.

12. Independent Contractor. Consultant is and shall at all times remain as to City, a wholly independent contractor. Neither City nor any of its agents shall have control of the conduct of Consultant or any of the Consultant's employees, except as herein set forth. Consultant shall not at any time or in any manner represent that it or any of its agents or employees are in any manner agents or employees of the City. Consultant shall be solely responsible for all contributions, payments, or withholdings normally made on behalf of an employee including but not limited to, state and federal income taxes, federal social security contributions, California State disability insurance taxes, and unemployment insurance contributions. City shall issue Consultant a Form 1099 in connection with the compensation paid hereunder, and Consultant shall pay all required taxes on amounts paid hereunder.

13. Notices. All notices and communications shall be sent to the parties at the following addresses:

CITY: City Manager
City of Rolling Hills
2 Portuguese Bend Road
Rolling Hills, California 90274

CONSULTANT: Ted Lubeshkoff
Consulting Arborist
952 Buena Vista Street
Duarte, CA 91010.

14. Conflict of Interest. Consultant affirms and warrants that he has no financial, contractual, or other interest or obligation that conflicts with or is harmful to the performance of his obligations under this Agreement. Consultant shall not during the term of this Agreement knowingly obtain such an interest or incur such an obligation.

15. Authorized Signature. Consultant affirms that the signatures, titles, and seals set forth hereinafter in execution of this Agreement represents all individuals, firm members, partners, joint ventures, and/or corporate officers having a principal interest herein.

16. Entire Agreement; Modification. This Agreement supersedes any and all other agreements, either oral or written, between the parties and contains all of the covenants and agreements between the parties. Each party to this Agreement acknowledges that no representations, inducements, promises, or agreements, orally or otherwise, have been made by any party, or anyone acting on behalf of any party, which are not embodied herein, and that any other agreement, statements, or promise not contained in this Agreement shall not be valid or binding. Any modification of this Agreement will be effective only if made in advance, in writing, and signed by both parties. The parties acknowledge and agree that their respective obligations under the Agreement

have been fully discharged.

IN WITNESS WHEREOF the parties hereto for themselves, their heirs, executors, administrators, successors, and assigns do hereby agree to the full performance of the covenants herein contained and have caused this Agreement to be executed on this 24th day of July 2019.

CONSULTANT:

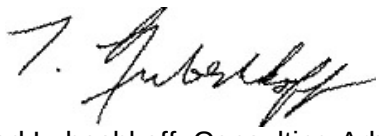

Ted Lubeshkoff, Consulting Arborist July 25, 2019

CITY OF ROLLING HILLS:

Elaine Jeng, City Manager

ATTEST:

City Clerk

EXHIBIT A

SCOPE OF WORK

The City of Rolling Hills is located in the Very High Fire Hazard Severity Zone, as designated by CalFire in 2007. In order to minimize wildfires in the City, the City Council adopted a Fire Fuel Abatement Ordinance (Municipal Code Chapter 8.30), requiring that "every person who owns or is in possession of any property, place, or area within the boundaries of the City shall, at his or her own expense, maintain the property, place or area free from any dead or alive tumbleweed or dead tree, shrub, palm frond or other plant." At this time, this ordinance is not applicable to slopes greater than 2:1 in gradient. The City's ordinance requires that the trees, shrubs, palm fronds, or other plants ("vegetation") must be entirely dead and not in a condition of dying in order to make the determination.

Consultant shall be available to City staff, on an as needed basis, to assist City staff in identifying whether vegetation observed in the field during routine inspections is dead regardless of the season. Consultant shall evaluate the vegetation and, if dead, recommend how to most effectively remove the vegetation, without causing an environmental risk (including but not limited to erosion) and appropriate replacement vegetation, and prepare a report to the City with Consultant's determination and recommendation. Consultant shall also attend City Council meetings on an as-needed basis as an expert resource upon two weeks' notice of the City Council meeting.

EXHIBIT B

Certificate of Exemption from Workers' Compensation Insurance

TO: City of Rolling Hills

SUBJECT: Sole Proprietor/Partnership/Closely Held Corporation with No Employees

Please let this memorandum notify the City of Rolling Hills that I am a

☐ sole proprietor
☐ partnership
☐ nonprofit organization
☒ closely held corporation

and **do not have any employees whose employment requires me to carry workers' compensation insurance**. Therefore, I do not carry worker's compensation insurance coverage.

Consultant Signature 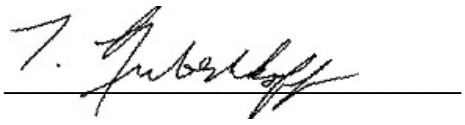

Printed Name of Consultant Ted Lubeshkoff

July 25, 2019

Date

City of Rolling Hills INCORPORATED JANUARY 24, 1957

Agenda Item No.: 11.A
Mtg. Date: 06/10/2024

TO: **HONORABLE MAYOR AND MEMBERS OF THE CITY COUNCIL**

FROM: **ROBERT SAMARIO, FINANCE DIRECTOR**

THRU: **KARINA BAÑALES, CITY MANAGER**

SUBJECT: **CONSIDERATION OF RESOLUTION NO. 1364 OF THE CITY COUNCIL OF THE CITY OF ROLLING HILLS ADOPTING THE FISCAL YEAR 2024-2025 CITY OF ROLLING HILLS BUDGET INCLUDING THE GENERAL FUND; REFUSE COLLECTION FUND; TRANSIT FUND - MEASURE R; TRANSIT FUND - MEASURE M; TRANSIT FUND - PROPOSITION A; TRANSIT FUND -PROPOSITION C; COPS FUND; MEASURE W FUND; AND RESOLUTION NO. 1365 ESTABLISHING THE ANNUAL FISCAL YEAR 2024-2025 APPROPRIATIONS GANN LIMIT FOR THE CITY OF ROLLING HILLS**

DATE: **June 10, 2024**

BACKGROUND:
Over the last several months, City staff and Council have worked on developing the proposed budget for the upcoming fiscal year 2024/25. This process ended on May 13, 2024, with the finalization of the revenue estimates and budgeted expenditures.

The budget is now set for adoption through a budget resolution that establishes the spending authority for each department and fund.

In addition to the budget resolution, Council will also be adopting a resolution that establishes the City's appropriation limit as required by Article XIII B of the Constitution of the State of California. The appropriations limit establishes a limit on the amount the City can collect and spend from the proceeds of local taxes. The limit for fiscal year 2024/25 is $2,139,735 and the City is well below the limit at $1,858,385.

The City is holding a public hearing to allow the public to weigh in the proposed budget prior to adoption.

DISCUSSION:
The City's budget consists of many different funds that account for a variety of services, programs and projects. The General Fund is the City's main operating fund where most of the City's services provided to the City's residents are accounted for. As with most city General

Funds, the primary revenues are derived from local and state taxes. The City also has several special revenue funds to account for revenues that are restricted as to their use; a capital projects fund to account for large capital improvement projects that often take more than one year to complete; and Refuse enterprise fund that accounts for waste collection and disposal services provided by contract to City residents and paid for from annual assessments to each property. Each of these funds are described in more detail below.

GENERAL FUND

The General Fund budget includes a total of $2,576,708 in ongoing operating expenditures, funded from $2,596,685 in revenues, leaving an operating surplus of $19,977.

The General Fund accounts for the ongoing and traditional services associated with local government, including public safety, planning, building, finance, and administration.

RESTRICTED FUNDS

Transit/Transportation Funds

The City receives revenues, primarily from the County, that are restricted for specific purposes. These include the allocation of special sales tax measures approved by Los Angeles County voters over the last several decades that are restricted to transit and transportation programs and projects. The measures include Proposition A, Proposition C, Measure R, and Measure M. In total, the City anticipates receiving $158,500 next fiscal year. Since the City of Rolling Hills does not own and operate a transit system and, in fact, has no transit service provided within the City limits, nor does the City own and maintain any public roads, the funds received pursuant to the four tax measures are either gifted to other agencies or exchanged for unrestricted monies with other agencies that can utilize the funds in accordance with their intended uses. Revenue estimates for fiscal year 2024-25 assume a growth of approximately 3% from the current year projections.

COPS Fund

The City also maintains a COPs Fund for monies received from the County's Supplemental Law Enforcement Services Fund, created in 2009 through an increase statewide to vehicle license fees. The revenues can only be used for supplemental law enforcement services and not to supplant existing funding from the General Fund for law enforcement. The revenues estimated for next fiscal year of$170,000 is in line with current year revenues.

Measure W Fund

The City receives an allocation of the countywide special parcel tax pursuant to the Measure W (Safe, Clean Water Act) for parcels located within the Los Angeles County Flood Control District. These revenues are intended for storm water recycling and water quality improvement projects and programs. The City receives a single payment each year for the full annual allocation. The estimated allocation for fiscal year 2024/25 is $105,500

ENTERPRISE FUND

Refuse Fund

The Refuse Fund is the City's only enterprise fund. Enterprise funds are typically used to account for utilities owned and operated by governments, such as water, wastewater, electricity, and refuse, and other operations that are similar to those provided by the private sector, such as airports and golf courses.

The Refuse Fund accounts for the contracted waste collection and disposal for all City of Rolling Hills residents. The fees charged to City residents are processed as a "Direct Assessment" through the County Assessor's Office, which means the annual assessment is added to the property tax bill sent to property owners by the County and is payable in two installments. Thus, the payments the City receives from the County for refuse services coincide with the payments we receive for regular property taxes.

The City's refuse rates are sufficient to fully cover the cost of refuse services provided by contract to City residents. For fiscal year 2024/25, the annual assessment will remain unchanged at $1,432.11 per parcel. This will generate slightly more than $1 million and will not require any General Fund contribution to cover the cost of refuse services.

FISCAL IMPACT:
The adopted budget sets forth the spending plan for the City.

RECOMMENDATION:
Staff recommends the City Council hold a public hearing and, following the close of the hearing, adopt the budget and appropriations limit resolutions.

ATTACHMENTS:
Attachment A - CL_AGN_240610_CC_GeneralFund_BudgetBalancing.pdf
Attachment B - CL-AGN_240610_CC_GeneralFund_AdoptedRevenues.pdf
Attachment C - CL_AGN_240610_CC_GeneralFund_AdoptedExpenditiures.pdf
Attachment D - CL_AGN_240610_CC_Restricted_Refuse_Funds.pdf
ResolutionNo1364_FY24-25_AdoptedBudget.pdf
ResolutionNo1365_FY24-25_AppropLimit.pdf
CL_PBN_240610_PH_CC_FY24-25_Budget_Affidavit.pdf

CITY OF ROLLINGS HILLS
Fiscal Year 2024/25 Budget Summary
General Fund

	Adopted Budget
Adopted Operating Revenues	$ 2,596,685
Adopted Operating Expenditures	2,576,708
Adopted Operating Surplus	**19,977**
Capital Transfers	-
Adopted Surplus - Total	**$ 19,977**

CITY OF ROLLING HILLS
Adopted Fiscal Year 2024/25 Revenues
General Fund

Property Taxes	$	1,500,750
Sales Taxes		10,000
Property Transfer Tax		64,890
Other Taxes		1,000
Motor Vehicle In Lieu		280,545
Building & Other Permits		400,000
C&D Permits		10,000
Variance, Planning & Zoning		25,000
Animal Control Fees		300
Franchise Fees		13,000
Fines & Traffic Violations		4,000
Cost Recoivery - Publications		3,000
RHCA Lease Revenue		69,000
Public Safety Aug Fund		1,200
Interest on Investments		140,000
PARS Earnings		44,000
Miscellaneous Revenue		6,000
Transfers In - Refuse Fund		24,000
TOTALS	**$**	**2,596,685**

CITY OF ROLLING HILLS
FY24/25 Adopted Budgeted Expenditures
GENERAL FUND

Department/Object Account		FY 2024/25 Adopted Budget
01 - CITY ADMINISTRATOR		
702	Salaries -Full Time	$ 436,262
705	Temporary Salaries	7,000
710	Retirement CalPERS-Employer	35,159
712	CalPERS Unfunded Liability	-
715	Workers Compensation Insurance	9,100
716	Group Insurance	80,378
717	Retiree Medical	37,500
718	Employer Payroll Taxes	33,821
719	Deferred Compensation	2,239
720	Auto Allowance	3,600
721	Phone Allowance	2,400
740	Office Supplies	13,000
745	Equipment Leasing Costs	11,000
750	Dues & Subscriptions	14,000
755	Conference Expense	2,000
757	Meetings Expense	2,300
759	Training & Education	5,000
761	Auto Mileage	500
765	Postage	19,500
775	City Council Expense	5,000
776	Miscellaneous Expenses	3,000
780	Comm./Newsletters & Outreach	2,500

Department/Object Account		FY 2024/25 Adopted Budget
785	Codification	2,400
790	Advertising	2,400
795	Other Gen Admin Expense	3,300
801	City Attorney	75,000
802	Legal Expense - Other	3,000
820	Website	6,000
850	Election Expense City Council	15,000
890	Consulting Fees	35,000
891	Records Management	1,700
	Total City Administrator	**869,059**
05 - Finance		
750	Dues & Subscriptions	4,500
810	Annual Audit	35,000
890	Consulting Fees	120,000
	Total Finance	**159,500**
15- PLANNING & DEVELOPMENT		
702	Salaries	219,953
703	Salaries - Part-Time	26,587
710	Retirement CalPERS-Employer	17,726
715	Workers Comp. Insurance	3,900
716	Group Insurance	48,107
718	Employer Payroll Taxes	19,310
719	Deferred Comp	4,681
720	Auto Allowance	1,200
721	Phone Allowance	600

Department/Object Account		FY 2024/25 Adopted Budget
761	Auto Mileage	300
750	Dues & Subscription	11,670
755	Conference Expense	2,000
759	Training & Education	1,000
776	Miscellaneous Expenses	2,000
790	Publication/Advertising/Noticing	10,000
802	Legal Expenses-Other	10,000
872	Property Development-Legal Exp	37,000
875	Willdan Building	45,000
878	Build Inspect. LA County	250,000
881	Storm Water Management	90,990
884	Special Project Study & Consult.	5,000
886	Code Enforcement	62,880
890	Consulting Fees (Onward)	15,000
928	Traffic Engineering	5,645
	Total Planning & Development	**890,549**
25 - Public Safety		
830	Law Enforcement	293,000
833	Other Law Enforcement Exp	4,000
837	Wild Life Mgmt & Pest Control	20,000
838	Animal Control Expense	6,000
	Total Public Safety	**323,000**
65 - NON-DEPARTMENTAL		
895	Insurance & Bond Expense	40,000
901	South Bay Comm. Organization	17,600

Department/Object Account		FY 2024/25 Adopted Budget
915	Community Recognition	8,000
917	Emergency Preparedness	77,000
	Total Non-Departmental	**142,600**
75 - CITY PROPERTIES		
892	IT Services	63,000
893	Granicus Services	8,300
894	Computer Hardware Fund	5,000
925	Utilities	60,000
930	Repairs & Maintenance	19,100
932	Area Landscaping	21,600
946	Buildings & Equipment	15,000
947	Non-Building Improvements	-
	Total City Properties	**192,000**
	TOTAL	**$ 2,576,708**

CITY OF ROLLING HILLS
Fiscal Year 2024/25 Adopted Budgets
Restricted Funds and Refuse Fund

		FY 2023/24 Amended Budget	FY 2024/25 Adopted Budget
10 - COPS FUND			
	Revenues		
570	COPS Allocation	$ 165,000	$ 170,000
	Expenditures		
840	COPS Program Expenditures	165,000	170,000
	Revenues Over (Under) Expenditures	$ -	$ -
25 - PROPOSITION A FUND			
	Revenues		
500	Grant Revenues	$ 52,000	$ 52,750
670	Interest Earned	300	300
	Total Revenues	52,300	53,050
	Expenditures		
620	Prop A Exchange	-	-
	Revenues Over (Under) Expenditures	$ 52,300	$ 53,050
26 - PROPOSITION C			
	Revenues		
501	Grant Revenue-Prop C	$ 43,000	$ 43,750
670	Interest Earned	250	250
	Total Revenues	43,250	44,000
	Expenditures		
906	Prop C Gifted	-	-
	Revenues Over (Under) Expenditures	$ 43,250	$ 44,000

		FY 2023/24 Amended Budget	FY 2024/25 Adopted Budget
27- MEASURE R TRANSIT			
	Revenues		
502	Measure R Grant Revenues	$ 33,000	$ 29,000
670	Interest Earned	250	250
	Total Revenues	33,250	29,250
	Expenditures		
907	Measure R Gifted	-	-
	Revenues Over (Under) Expenditures	$ 33,250	$ 29,250
29 - MEASURE M			
	Revenues		
507	Measure M Local Return	$ 37,000	$ 33,000
670	Interest Earned	250	250
	Total Revenues	37,250	33,250
	Expenditures		
XXX	Measure M Gifted	-	-
	Revenues Over (Under) Expenditures	$ 37,250	$ 33,250
30 - MEASURE W			
	Revenues		
508	Grant Revenues	$ 105,000	$ 105,000
670	Interest Earned	500	500
	Total Revenues	105,500	105,500
	Expenditures		
913	Storm Water Management - 30%	31,650	31,650
914	Storm Water Management - 70%	73,850	73,850
		105,500	105,500
	Revenues Over (Under) Expenditures	$ -	$ -

		FY 2023/24 Amended Budget	FY 2024/25 Adopted Budget
50 - REFUSE FUND			
	Revenues		
665	Service Charges	$ 1,005,336	$ 1,005,336
699	Transfers In - General Fund	-	
	Total Revenues	1,005,336	1,005,336
	Expenditures		
815	Refuse Service Contract	981,336	981,336
790	Advertising	-	
999	Transfers Out	24,000	24,000
	Total Expenditures	1,005,336	1,005,336
	Revenues Over (Under) Expenditures	$ -	$ -

RESOLUTION NO. 1364

A RESOLUTION OF THE CITY COUNCIL OF THE CITY OF ROLLING HILLS ADOPTING THE FISCAL YEAR 2024-25 CITY OF ROLLING HILLS BUDGET

RECITALS

A. Members of the Rolling Hills City Council opened a public hearing on Monday, June 10, 2024 to consider the recommended Fiscal Year 2024-25 City of Rolling Hills Proposed Budget; and

B. Following the public hearing on the Fiscal Year 2024-25 City of Rolling Hills Proposed Budget, members of the Rolling Hills City Council desire to adopt said document.

NOW, THEREFORE, BE IT RESOLVED BY MEMBERS OF THE ROLLING HILLS CITY COUNCIL AS FOLLOWS:

Section 1. Members of the City Council hereby adopt the Fiscal Year 2024-25 City of Rolling Hills Budget, attached hereto as Exhibit A and incorporated herein by reference.

Section 2. Appropriations in the amount not to exceed $2,576,708 are authorized in the Fiscal Year 2024-25 General Fund Budget for the purpose of carrying on the business of the City for general government, public safety, public service, and other items.

Section 3. Appropriations in the amount not to exceed $1,280,836 are authorized in the various funds for carrying on the business of the City: COPs Fund, Proposition A Fund, Proposition C Fund, Measure R Fund, Measure M Fund, Measure W Fund, and Refuse Fund.

Section 4. The City Manager may transfer appropriations between and among all departments, as defined in the Fiscal Year 2024-25 budget in order to ensure revenue and expenditures correspond to the intent of the City Council. The legal level of appropriated budgetary control, that is the level at which expenditures may not exceed appropriations, is at the department level for the General Fund and at the fund level for all other funds. Supplemental appropriations during the year must be approved by the City Council. All unexpended budgetary appropriations lapse at the end of the fiscal year.

Section 5. The Mayor is hereby directed to sign this Resolution, and the City Clerk is directed to attest thereto.

PASSED, APPROVED AND ADOPTED this 10th day of June, 2024.

_____
Leah Mirsch
Mayor

ATTEST:

_____
Christian Horvath
City Clerk

STATE OF CALIFORNIA)
COUNTY OF LOS ANGELES) SS
CITY OF ROLLING HILLS)

The foregoing Resolution No. 1364 entitled:

A RESOLUTION OF THE CITY COUNCIL OF THE CITY OF ROLLING HILLS ADOPTING THE FISCAL YEAR 2024-25 CITY OF ROLLING HILLS BUDGET

was approved and adopted at a regular meeting of the City Council on the 10th day of June, 2024, by the following roll call vote:

AYES:
NOES:
ABSENT:
ABSTAIN:

_____
CHRISTIAN HORVATH
CITY CLERK

CITY OF ROLLING HILLS
Fiscal Year 2024-25 Adopted Budget

01 - General Fund	
City Administrator	$ 934,776
Finance Department	159,500
Planning & Development Department	890,549
Public Safety	323,000
Non-Departmental	142,600
City Properties	192,000
Total General Fund	$2,642,425
Other Funds	
10 - COPs Fund	$ 170,000
25 - Proposition A Fund	-
26 - Proposition C Fund	-
27 - Measure R Fund	-
29 - Measure M Fund	-
30 - Measure W Fund	105,500
50 - Refuse Fund	1,005,336
Total Other Funds	$1,280,836

RESOLUTION NO. 1365

A RESOLUTION OF THE CITY COUNCIL OF THE CITY OF ROLLING HILLS ESTABLISHING THE 2024-25 FISCAL YEAR GANN APPROPRIATION LIMIT FOR THE CITY OF ROLLING HILLS.

WHEREAS, the City of Rolling Hills has heretofore established its Base Year Appropriations Limit as $256,941; and

WHEREAS, to the best of this City's knowledge and belief, the State Department of Finance figures reflect the following statistics relevant to the calculation of the 2024-25 Fiscal Year Appropriations Limit:

California per capita personal income, 3.62% (three point six two percent).

Population Adjustments for County of Los Angeles for FY 2024-25, 0.05% (zero point zero five percent).

NOW, THEREFORE, IT IS HEREBY RESOLVED AS FOLLOWS:

Section 1. Based on the foregoing figures and the provision of Article XIII B of the Constitution of the State of California, the following figure accurately represents the 2024-25 Fiscal Year Appropriation Limit of the City of Rolling Hills: $2,139,735.

Section 2. The City Clerk shall certify to the passage of Resolution No. 1365.

PASSED, APPROVED AND ADOPTED this 10th day of June, 2024.

_____
Leah Mirsch
Mayor

ATTEST:

_____
Christian Horvath
City Clerk

STATE OF CALIFORNIA)
COUNTY OF LOS ANGELES) SS
CITY OF ROLLING HILLS)

The foregoing Resolution No. 1365 entitled:

A RESOLUTION OF THE CITY COUNCIL OF THE CITY OF ROLLING HILLS ESTABLISHING THE 2024-25 FISCAL YEAR GANN APPROPRIATION LIMIT FOR THE CITY OF ROLLING HILLS.

was approved and adopted at a regular meeting of the City Council on the 10th day of June, 2024, by the following roll call vote:

AYES:
NOES:
ABSENT:
ABSTAIN:

_____
CHRISTIAN HORVATH
CITY CLERK

DAILY BREEZE
Local. News. Matters.
dailybreeze.com

2615 Pacific Coast Highway #329
Torrance, California 90254
(310) 543-6635
pfernandez@scng.com

City of Rolling Hills
2 Portuguese Bend Road
Rolling Hills, California 90274

Account Number:	5007827
Ad Order Number:	0011670579
Customer's Reference/PO Number:	
Publication:	Daily Breeze
Publication Dates:	05/25/2024
Total Amount:	$404.54
Payment Amount:	$0.00
Amount Due:	$404.54
Notice ID:	ndI4CAIICMeaMu0rZerO
Invoice Text:	NOTICE OF PUBLIC HEARING OF THE CITY COUNCIL OF THE CITY OF ROLLING HILLS, CALIFORNIA NOTICE IS HEREBY GIVEN, that the City Council of the City of Rolling Hills will conduct a public hearing at its Regular Meeting to be held on Monday, June 10, 2024, beginning at 7:00 p.m. to consider adoption of the following: CONSIDERATION OF RESOLUTION NO. 1364 OF THE CITY COUNCIL OF THE CITY OF ROLLING HILLS ADOPTING THE FISCAL YEAR 2024-2025 CITY OF ROLLING HILLS BUDGET INCLUDING THE GENERAL FUND; COMMUNITY FACILITIES FUND; MUNICIPAL SELF INSURANCE FUND; REFUSE COLLECTION FUND; SOLID WASTE CHARGES; TRANSIT FUND – MEASURE R; TRANSIT FUND – MEASURE M; TRANSIT FUND – PROPOSITION A; TRANSIT FUND – PROPOSITION C; COPS AND CLEEP FUND; UTILITY FUND; CAPITAL PROJECT FUND; MEASURE W FUND; MEASURE A FUND; AND FUND 16 (CALOES/FEMA) ; AND RESOLUTION NO. 1365 ESTABLISHING THE ANNUAL FISCAL YEAR 2024-2025 APPROPRIATIONS GANN LIMIT FOR THE CITY OF ROLLING HILLS. Public Participation: The meeting agenda is available on the City’s website. A live audio of the City Council meeting will be available on the City’s website (http://www.rolling-hills.org/). Both the agenda and live audio can be found here: https://www.rolling-hills.org/government/agenda/index.php . Members of the public may submit comments prior to the start of the meeting by emailing the City Clerk at cityclerk@cityofrh.net. Your comments will become part of the official meeting record. You may provide your full name, but please do not provide any other personal information (i.e. phone numbers, addresses, etc.) that you do not want to be

DAILY BREEZE
Local. News. Matters.
dailybreeze.com

Daily Breeze
2615 Pacific Coast Highway #329
Torrance, California 90254
(310) 543-6635

0011670579

City of Rolling Hills
2 Portuguese Bend Road
Rolling Hills, California 90274

PROOF OF PUBLICATION
(2015.5 C.C.P.)

STATE OF CALIFORNIA
County of Los Angeles

I am a citizen of the United States and a resident of the County aforesaid; I am over the age of eighteen years, and not party to or interested in the above-entitled matter. I am the principal clerk of the printer of Daily Breeze, a newspaper of general circulation, printed and published in the City of Torrance*, County of Los Angeles, and which newspaper has been adjudged a newspaper of general circulation by the Superior Court of County of Los Angeles, State of California, under the date of June 15, 1945, Decree No. Pomo C-606. The notice, of which the annexed is a printed copy (set in type not smaller than nonpareil), has been published in each regular and entire issue of said newspaper and not in any supplement thereof on the following dates, to wit:

05/25/2024

I certify (or declare) under the penalty of perjury that the foregoing is true and correct.

Dated at Torrance, California

On this 25th day of May, 2024.

Signature

*Daily Breeze circulation includes the following cities: Carson, Compton, Culver City, El Segundo, Gardena, Harbor City, Hawthorne, Hermosa Beach, Inglewood, Lawndale, Lomita, Los Angeles, Long Beach, Manhattan Beach, Palos Verdes Peninsula, Palos Verdes, Rancho Palos Verdes, Rancho Palos Verdes Estates, Redondo Beach, San Pedro, Santa Monica, Torrance and Wilmington

NOTICE OF PUBLIC HEARING
OF THE CITY COUNCIL
OF THE CITY OF ROLLING HILLS, CALIFORNIA

NOTICE IS HEREBY GIVEN, that the City Council of the City of Rolling Hills will conduct a public hearing at its Regular Meeting to be held on **Monday, June 10, 2024, beginning at 7:00 p.m.** to consider adoption of the following:

CONSIDERATION OF RESOLUTION NO. 1364 OF THE CITY COUNCIL OF THE CITY OF ROLLING HILLS ADOPTING THE FISCAL YEAR 2024-2025 CITY OF ROLLING HILLS BUDGET INCLUDING THE GENERAL FUND; COMMUNITY FACILITIES FUND; MUNICIPAL SELF INSURANCE FUND; REFUSE COLLECTION FUND; SOLID WASTE CHARGES; TRANSIT FUND – MEASURE R; TRANSIT FUND – MEASURE M; TRANSIT FUND – PROPOSITION A; TRANSIT FUND – PROPOSITION C; COPS AND CLEEP FUND; UTILITY FUND; CAPITAL PROJECT FUND; MEASURE W FUND; MEASURE A FUND; AND FUND 16 (CALOES/FEMA) ; AND RESOLUTION NO. 1365 ESTABLISHING THE ANNUAL FISCAL YEAR 2024-2025 APPROPRIATIONS GANN LIMIT FOR THE CITY OF ROLLING HILLS.

Public Participation: The meeting agenda is available on the City's website. A live audio of the City Council meeting will be available on the City's website (http://www.rolling-hills.org/). Both the agenda and live audio can be found here: https://www.rolling-hills.org/government/agenda/index.php .

Members of the public may submit comments prior to the start of the meeting by emailing the City Clerk at cityclerk@cityofrh.net. Your comments will become part of the official meeting record. You may provide your full name, but please do not provide any other personal information (i.e. phone numbers, addresses, etc.) that you do not want to be published.

For additional information contact the City Clerk at 310-377-1521 or email cityclerk@cityofrh.net.

Daily Breeze
Published: 5/25/24

City of Rolling Hills INCORPORATED JANUARY 24, 1957

Agenda Item No.: 12.A
Mtg. Date: 06/10/2024

TO: **HONORABLE MAYOR AND MEMBERS OF THE CITY COUNCIL**

FROM: **CHRISTIAN HORVATH, CITY CLERK / EXECUTIVE ASSISTANT TO CITY MANAGER**

THRU: **KARINA BAÑALES, CITY MANAGER**

SUBJECT: **ADOPT RESOLUTION NO. 1368, A RESOLUTION OF THE CITY COUNCIL OF THE CITY OF ROLLING HILLS. CALIFORNIA AUTHORIZING A FISCAL YEAR 2023-2024 BUDGET MODIFICATION TO INCREASE APPROPRIATIONS BY $66,345.73 IN FUND 16 FROM A TRANSFER OF GENERAL FUND RESERVES FOR PROVIDING SPECIALTY POTHOLING SERVICES WITHIN THE 20B PORTION OF THE EASTFIELD DRIVE FIRE PREVENTION POWER LINE UNDERGROUNDING PROJECT**

DATE: **June 10, 2024**

BACKGROUND:
In order to preserve the rural character of Rolling Hills and eliminate risks of wildfires, the City Council encourages and supports utility undergrounding throughout the community. In line with this vision, the City applied for Hazard Mitigation Grant funds through the FEMA Hazard Mitigation Program.

On January 26, 2022, the City was awarded $1,971,882 in Federal funds to underground utility infrastructure on Eastfield Drive between Outrider Road and Hackamore Road. The grant requires a Local Match of 25%, or $657,294, for a total project amount of $2,629,176. The Local Match can be fulfilled using the City's Rule 20A work credits.

Through Councilmember Wilson's efforts and involvement, a donation of $1,000,000 Rule 20A work credits from Supervisor Hahn's Office was approved in December 2022.

The California Public Utility Commission requires the local agencies to adopt an ordinance creating an underground district in the area where both the existing and new facilities are and will be located. The formation of the Underground Utility District (UUD) provides SCE with the authorization needed to develop the design plans to remove existing overhead facilities and install replacement underground facilities.

On November 14, 2022, the City Council adopted Resolution No. 1316 to create Underground

Utility District No. 2 (UUD-02) (Eastfield Drive) and set a public hearing for the January 23, 2023 City Council meeting. Letters were sent on November 29, 2022, and January 4, 2023, to all property owners whose property or portion of their property would fall within the proposed Underground Utility District to notify them of the formation of UUD and the public hearing.

The length of UUD-02 is divided into two segments: Rule 20A and Rule 20B. Southern California Edison (SCE) handles the design and joint trench bidding and assists in coordinating with the other utility companies for Rule 20A projects. Rule 20B projects are also designed by SCE; however, joint trench bidding is handled by the City. Over the past several years, City Staff has held monthly meetings with SCE and other utility service providers to ensure the project continues progressing. In preparation for the UUD, SCE has conducted numerous site visits to confirm the scope and limits of work and the preparation of a Rough Order of Magnitude (ROM), an estimate of the project. On January 4, 2023, SCE submitted the ROM for the Rule 20A segment, which is based on the estimated trench footage of 1,250 feet and includes all mainline trenching as well as crossings, streetlights, and service laterals with the cost estimate of $1,000,000, expressed in 2024 dollars.

Resolution No. 1322 was adopted on January 23, 2023, and allowed SCE to begin designing the undergrounding system to replace the existing overhead facilities within the designated Underground Utility District. In addition, SCE coordinates with other utility service providers that have facilities on the existing overhead system to ensure their respective undergrounding designs coincide with SCE's efforts.

The Federal grant received for the Eastfield Drive Underground Utility project requires the project to be completed by August 4, 2025, in order to expend the grant funds. Any delay in establishing the Underground Utility District hinders the project and could potentially jeopardize the availability and use of the grant funds.

DISCUSSION:

On April 22, 2024, the City Council was presented with five responses to a Request for Proposals (RFP) for Potholing Services and approved the lowest proposer (Hot Line Construction, Inc.) that met all requirements within the RFP for a scope of work including:

1. Potholing for six vault locations as identified on SCE’s Preliminary Design Plans for the Rule 2B Project
2. Obtaining the required permit (no fee) from RHCA
3. Restoring the potholing trenches in accordance with RHCA Trench Backfill and Pavement Repairs
4. Provide appropriate Traffic Control, including flagmen, as deemed necessary.

Hot Line Construction's proposal was for a not-to-exceed amount of $57,915. The RFP required submissions to include a cost sheet for Time & Equipment in the event that additional work was required.

On May 14, 2024, Hot Line began work along Eastfield Drive and completed their initial potholing on May 16th. At that time, they notified City and RHCA staff that the location for Edison Vault 5774207 (Station 64+02) had a conflict. They found an unmarked and unknown

1-1/2” steel line crossing in the center of their pothole and requested approval to return on May 20th to find a clear location where the vault could potentially be re-located. City staff approved the Time and Equipment.

On May 20, 2024, Hot Line completed their work and verified the re-location of the vault 13 feet from Station 64+02 to Station 64+15.

The attached Budget Modification allows the City to pay for services provided and request reimbursement from CalOES via the grant.

FISCAL IMPACT:
Under Rule 20B, the City is required to cover the costs for any contracted work and then be reimbursed from the grant funds. The grant pays for 75% of the fee and the city pays 25% of the fee using Rule 20A tariff credits. Staff will return to Council with a proposed resolution to amend the budget based on the costs and flow of funds described herein.

The total fee for Hot Line Construction, Inc. is $66,345.73.

RECOMMENDATION:
Approve as presented.

ATTACHMENTS:
ResolutionNo1368_EastfieldDrive20B_Potholing_BudgetAmendment_F.pdf
CA_AGR_240422_HotLineConst_Eastfield_UU_20B_Potholing.pdf

RESOLUTION NO. 1368

A RESOLUTION OF THE CITY COUNCIL OF THE CITY OF ROLLING HILLS. CALIFORNIA AUTHORIZING A FISCAL YEAR 2023-2024 BUDGET MODIFICATION TO INCREASE APPROPRIATIONS BY $66,345.73 IN FUND 16 FROM A TRANSFER OF GENERAL FUND RESERVES FOR PROVIDING SPECIALTY POTHOLING SERVICES WITHIN THE 20B PORTION OF THE EASTFIELD DRIVE FIRE PREVENTION POWER LINE UNDERGROUNDING PROJECT

THE CITY COUNCIL OF THE CITY OF ROLLING HILLS, CALIFORNIA, DOES HEREBY RESOLVE, DECLARE, DETERMINE, AND ORDER AS FOLLOWS:

Section 1. Recitals.

A. It is the intention of the City Council of the City of Rolling Hills to review the adopted budget from time to time.

B. On April 22, 2024 the City Council received a presentation from staff regarding proposals that the City received for the specialty potholing services to confirm proposed vault locations within the 20B portion of the Eastfield Drive fire prevention power line undergrounding project.

C. As it is the Rule 20B portion of the undergrounding, the City will be required to cover the costs for any contracted work and then be reimbursed from the grant funds. The CalOES/FEMA Hazard Mitigation Grant pays for 75% of the overall fee and the City pays 25% of the fee using Rule 20A tariff credits.

D. The lowest proposer meeting the Request for Proposal requirements was $57,915. Upon completion of the initial services, it was determined that additional work, in the amount of $8,430.73, was required to clear one proposed Southern California Edison vault location due to obstructions found under the roadway thus requiring an additional day of work at Time & Equipment rates as originally provided. As stated in section 3.9.1 of the Professional Services Agreement, “the total compensation, as may be adjusted upon mutual agreement, shall constitute complete and adequate payment for services…” Per Section1.C, the City will be reimbursed for construction expenses upon completion and filing of a Reimbursement Request with CalOES.

E. The City desires to appropriate an additional Sixty-six thousand, three hundred and forty-five dollars and seventy-three cents ($66,345.73) in

Fund 16 from a transfer of General Fund Reserves for the Rule 20B undergrounding project on Eastfield Drive.

Section 2. The sum of Sixty-six thousand, three hundred and forty-five dollars and seventy-three cents ($66,345.73) is hereby appropriated in the Fund 16 from a transfer of General Fund Reserves for Rule 20B undergrounding project on Eastfield Drive.

Section 3. This Resolution shall take effect immediately upon its adoption by the City Council, and the City Clerk shall certify to the passage and adoption of this Resolution and enter it into the book or original resolutions.

PASSED, APPROVED, AND ADOPTED this 10th day of June, 2024

_____
LEAH MIRSCH
MAYOR

ATTEST:

_____
CHRISTIAN HORVATH
CITY CLERK

STATE OF CALIFORNIA)
COUNTY OF LOS ANGELES) §§
CITY OF ROLLING HILLS)

The foregoing Resolution No. 1355 entitled:

A RESOLUTION OF THE CITY COUNCIL OF THE CITY OF ROLLING HILLS. CALIFORNIA AUTHORIZING A FISCAL YEAR 2023-2024 BUDGET MODIFICATION TO INCREASE APPROPRIATIONS BY $66,345.73 IN FUND 16 FROM A TRANSFER OF GENERAL FUND RESERVES FOR PROVIDING SPECIALTY POTHOLING SERVICES WITHIN THE 20B PORTION OF THE EASTFIELD DRIVE FIRE PREVENTION POWER LINE UNDERGROUNDING PROJECT

was approved and adopted at a regular meeting of the City Council on the 10th day of June 2024, by the following roll call vote:

AYES:
NOES:
ABSENT:
ABSTAIN:

_____
CHRISTIAN HORVATH
CITY CLERK

CITY OF ROLLING HILLS
SPECIALTY SERVICES AGREEMENT

1. PARTIES AND DATE.

This Agreement is made and entered into as April 22, 2024 by and between the CITY OF ROLLING HILLS, a California municipal corporation (hereinafter the "City") and HOT LINE CONSTRUCTION, INC., a California Corporation with its principal place of business at 9020 Brentwood Blvd., Suite H Brentwood, CA 94513 (hereinafter referred to as "Designer"). City and Designer are sometimes individually referred to herein as "Party" and collectively as "Parties."

2. RECITALS.

2.1 Designer**.** Designer desires to perform and assume responsibility for the provision of certain professional services required by the City on the terms and conditions set forth in this Agreement. Designer warrants that it is fully licensed, qualified, and willing to perform the services required by this Agreement; provided, however, that if Designer is a corporation or other organization, the Project Designer designated pursuant to Section 3.2, and not the Designer itself, shall be fully licensed to practice as an architect and/or engineer in the State of California.

2.2 Project**.** City desires to engage Designer to render such services for potholing to confirm and verify the existence of any underground facilities within specified areas as directed by the City ("Project") in compliance with the terms of this Agreement.

3. TERMS

3.1 Employment of Designer.

3.1.1 Scope of Services. Designer promises and agrees to furnish to City all labor, materials, tools, equipment, services, and incidental and customary work necessary to fully and adequately supply the professional design and related services necessary for the full and adequate completion of the Project consistent with the provisions of this Agreement (hereinafter referred to as "Services"). The Services are more particularly described throughout this Agreement, including Exhibit "A" attached hereto and incorporated herein by reference. All Services shall be subject to, and performed in accordance with, this Agreement, any exhibits attached hereto and incorporated herein by reference, and all applicable local, state and federal laws, rules and regulations. All Services performed by Designer shall be subject to the sole and discretionary approval of the City, which approval shall not be unreasonably withheld. Additionally, Designer shall comply with all Federal requirements applicable to the Services as set forth in Exhibit "A-I."**]**

3.1.2 Term. The term of this Agreement shall be from April 22, 2024 to May 22, 2024, unless earlier terminated as provided herein. Designer shall complete the Services within the term of this Agreement, and shall meet any other established schedules and deadlines.

3.2 Project Designer; Key Personnel.

3.2.1 Project Designer. Designer shall name a specific individual to act as Project Designer, subject to the approval of City. Designer hereby designates Mark Meekhof to act as the Project Designer for the Project. The Project Designer shall: (1) maintain oversight of

the Services; (2) have full authority to represent and act on behalf of the Designer for all purposes under this Agreement; (3) supervise and direct the Services using his or her best skill and attention; (4) be responsible for the means, methods, techniques, sequences and procedures used for the Services; (5) adequately coordinate all portions of the Services; and (6) act as principal contact with City and all contractors, consultants, engineers and inspectors on the Project. Any change in the Project Designer shall be subject to the City's prior written approval, which approval shall not be unreasonably withheld. The new Project Designer shall be of at least equal competence as the prior Project Designer. In the event that City and Designer cannot agree as to the substitution of a new Project Designer, City shall be entitled to terminate this Agreement for cause.

3.3 Hiring of Consultants and Personnel.

3.3.1 Right to Hire or Employ. Designer shall have the option, unless City objects in writing after notice, to employ at its expense architects, engineers, experts or other consultants qualified and licensed to render services in connection with the planning and/or administration of the Project, and to delegate to them such duties as Designer may delegate without relieving Designer from administrative or other responsibility under this Agreement. Designer shall be responsible for the coordination and cooperation of Designer's architects, engineers, experts or other consultants. All consultants, including changes in consultants, shall be subject to approval by City in its sole and reasonable discretion. Designer shall notify City of the identity of all consultants at least fourteen (14) days prior to their commencement of work to allow City to review their qualifications and approve to their participation on the Project in its sole and reasonable discretion.

3.3.2 Qualification and License. All architects, engineers, experts and other consultants retained by Designer in performance of this Agreement shall be qualified to perform the Services assigned to them, and shall be licensed to practice in their respective professions, where required by law.

3.3.3 Standards and Insurance. All architects, engineers, experts and other consultants hired by Designer shall be required to meet all of the same standards and insurance requirements set forth in this Agreement, unless other standards or requirements are approved by the City in writing. Unless changes are approved in writing by the City, Designer's agreements with its consultants shall contain a provision making them subject to all provisions stipulated in this Agreement.

3.3.4 Assignments or Staff Changes. Designer shall promptly obtain written City approval of any assignment, reassignment or replacement of such architects, engineers, experts and consultants, or of other staff changes of key personnel working on the Project. As provided in the Agreement, any changes in Designer's consultants and key personnel shall be subject to approval by City.

3.3.5 Draftsman and Clerical Support. Draftsmen and clerical personnel shall be retained by Designer at Designer's sole expense.

3.4 Standard of Care.

3.4.1 Standard of Care. Designer shall perform all Services under this Agreement in a skillful and competent manner, consistent with the standards generally recognized as being employed by professionals qualified to perform the Services in the same discipline in the

State of California, and shall be responsible to City for damages sustained by the City and delays to the Project as specified in the indemnification provision of this Agreement. Without limiting the foregoing, Designer shall be fully responsible to the City for any increased costs incurred by the City as a result of any such delays in the design or construction of the Project. Designer represents and maintains that it is skilled in the professional calling necessary to perform the Services. Designer warrants and represents that all of its employees, architects, engineers, experts and other consultants shall have sufficient skill and experience to perform the Services assigned to them. Finally, Designer represents that it, its employees, architects, engineers, experts and other consultants have all licenses, permits, qualifications and approvals of whatever nature that are legally required to perform the Services assigned to or rendered by them and that such licenses and approvals shall be maintained throughout the term of this Agreement. As provided for in the indemnification provisions of this Agreement, Designer shall perform, at its own cost and expense and without reimbursement from the City, any services necessary to correct errors or omissions which are caused by the Designer's failure to comply with the standard of care provided for herein.

3.4.2 Performance of Employees. Any employee or consultant who is determined by the City to be uncooperative, incompetent, a threat to the adequate or timely completion of the Project, a threat to the safety of persons or property, or any employee or consultant who fails or refuses to perform the Services in a manner acceptable to the City, shall be promptly removed from the Project by the Designer and shall not be re-employed to perform any of the Services or to work on the Project.

3.5 Laws and Regulations.

3.5.1 Knowledge and Compliance. Designer shall keep itself fully informed of and in compliance with all applicable local, state and federal laws, rules and regulations in any manner affecting the performance of the Services or the Project, and shall give all notices required of the Designer by law. Designer shall be liable, pursuant to the standard of care and indemnification provisions of this Agreement, for all violations of such laws and regulations in connection with its Services. If the Designer performs any work knowing it to be contrary to such laws, rules and regulations, Designer shall be solely responsible for all costs arising therefrom. Designer shall defend, indemnify and hold City, its officials, officers, employees and agents free and harmless, pursuant to the indemnification provisions of this Agreement, from any claim or liability arising out of any failure or alleged failure to comply with such laws, rules or regulations.

3.5.2 Permits, Approvals and Authorizations. Designer shall provide City with a list of all permits, approvals or other authorizations required for the Project from all federal, state or local governmental bodies with approval jurisdiction over the Project. Designer shall then assist the City in obtaining all such permits, approvals and other authorizations. The costs of such permits, approvals and other authorizations shall be paid by the City.

3.5.3 Water Quality Management and Compliance.

(a) Compliance with Water Quality Laws, Ordinances and Regulations. Designer shall keep itself and all subcontractors, staff, and employees fully informed of and in compliance with all local, state and federal laws, rules and regulations that may impact, or be implicated by the performance of the Services including, without limitation, all applicable provisions of the City's ordinances regulating water quality and storm water; the Federal Water Pollution Control Act (33 U.S.C. § 1251 *et seq.*); the California Porter-Cologne Water Quality Control Act (Cal Water Code §§ 13000-14950); and any and all regulations, policies, or permits

issued pursuant to any such authority. Designer shall additionally comply with the lawful requirements of the City, and any other municipality, drainage City, or other local agency with jurisdiction over the location where the Services are to be conducted, regulating water quality and storm water discharges.

(b) Liability for Non-compliance.

(i) Indemnity: Failure to comply with laws, regulations, and ordinances listed in this Sections is a violation of federal and state law. Notwithstanding any other indemnity contained in this Agreement, Designer agrees to indemnify and hold harmless the City, its officials, officers, agents, employees and authorized volunteers from and against any and all claims, demands, losses or liabilities of any kind or nature which the City, its officials, officers, agents, employees and authorized volunteers may sustain or incur for noncompliance with the laws, regulations, and ordinances listed above, arising out of or in connection with the Services, except for liability resulting from the sole established negligence, willful misconduct or active negligence of the City, its officials, officers, agents, employees or authorized volunteers.

(ii) Defense: City reserves the right to defend any enforcement action or civil action brought against the City for Designer's failure to comply with any applicable water quality law, regulation, or policy. Designer hereby agrees to be bound by, and to reimburse the City for the costs associated with, any settlement reached between the City and the relevant enforcement entity.

(iii) Damages: City may seek damages from Designer for delay in completing the Services caused by Designer's failure to comply with the laws, regulations and policies described in this section of this Agreement, or any other relevant water quality law, regulation, or policy.

3.6 Independent Contractor.

3.6.1 Control and Payment of Subordinates. City retains Designer on an independent contractor basis and Designer is not an employee of City. Designer is not an employee for state tax, federal tax or any other purpose, and is not entitled to the rights or benefits afforded to City's employees. Any additional personnel performing the Services under this Agreement on behalf of Designer shall also not be employees of City, and shall at all times be under Designer's exclusive direction and control. Designer shall pay all wages, salaries, and other amounts due such personnel in connection with their performance of Services under this Agreement and as required by law. Designer shall be responsible for all reports and obligations respecting such additional personnel, including, but not limited to: social security taxes, income tax withholding, unemployment insurance, disability insurance, and workers' compensation insurance.

3.7 Schedule of Services.

3.7.1 Designer Services. Designer shall fully and adequately complete the Services described in this Agreement and in Exhibit "A" attached hereto and incorporated herein by reference.

3.7.2 Timely Performance Standard. Designer shall perform all Services hereunder as expeditiously as is consistent with professional skill and care, as well as the orderly progress of the Project work so as not to be the cause, in whole or in part, of delays in the

completion of the Project or in the achievement of any Project milestones, as provided herein. Specifically, Designer shall perform its Services so as to allow for the full and adequate completion of the Project within the time required by the City and within any completion schedules adopted for the Project. Designer agrees to coordinate with City's staff, contractors and consultants in the performance of the Services, and shall be available to City's staff, contractors and consultants at all reasonable times.

3.8 City Responsibilities. City's responsibilities shall include the following:

3.8.1 Data and Information. City shall make available to Designer all necessary data and information concerning the purpose and requirements of the Project, including scheduling and budget limitations, objectives, constraints and criteria.

3.8.2 City's Representative. The City hereby designates the City Manager, or his or her designee, to act as its representative for the performance of this Agreement ("City's Representative"). City's Representative shall have the power to act on behalf of the City for all purposes under this Contract. The City Manager hereby designates Christian Horvath as the City's contact for the implementation of the Services hereunder. Contractor shall not accept direction or orders from any person other than the City's Representative or his or her designee.

3.8.3 Review and Approved Documents. Review all documents submitted by Designer, including change orders and other matters requiring approval by the City Council or other officials. City shall advise Designer of decisions pertaining to such documents within a reasonable time after submission, so as not to cause unreasonable delay as provided in the excusable delay provisions of this Agreement above.

3.9 Compensation.

3.9.1 Designer's Compensation for Basic Services. City shall pay to Designer, for the performance of all Services rendered under this Agreement, the total not to exceed amount of **Fifty Seven Thousand, Nine Hundred and Fifteen Dollars ($57,915.00)** ("Total Compensation"). This Total Compensation amount shall be based upon, and may be adjusted according to, the fee schedule and related terms and conditions attached hereto as Exhibit "B" and incorporated herein by reference. The Total Compensation, as may be adjusted upon mutual agreement, shall constitute complete and adequate payment for Services under this Agreement.

3.9.2 Withholding Payment to Designer. The City may withhold payment, in whole or in part, to the extent reasonably necessary to protect the City from claims, demands, causes of action, costs, expenses, liabilities, losses, damages, or injuries of any kind to the extent arising out of or caused by the negligence, recklessness, or willful misconduct protected under the indemnification provisions of this Agreement. Failure by City to deduct any sums from a progress payment shall not constitute a waiver of the City's right to such sums. The City may keep any moneys which would otherwise be payable at any time hereunder and apply the same, or so much as may be necessary therefor, to the payment of any expenses, losses, or damages as determined by the City, incurred by the City for which Designer is liable under the Agreement or state law. Payments to the Designer for compensation and reimbursable expenses due shall not be contingent on the construction, completion or ultimate success of the Project. Payment to the Designer shall not be withheld, postponed, or made contingent upon receipt by the City of offsetting reimbursement or credit from parties not within the Designer's reasonable control.

3.9.3 Prevailing Wages. Designer is aware of the requirements of California Labor Code Sections 1720, et seq., and 1770, et seq., as well as California Code of Regulations, Title 8, Section 16000, et seq., ("Prevailing Wage Laws"), which require the payment of prevailing wage rates and the performance of other requirements on certain "public works" and "maintenance" projects. If the Services are being performed as part of an applicable "public works" or "maintenance" project, as defined by the Prevailing Wage Laws, and if the total compensation is $1,000 or more, Designer agrees to fully comply with and to require its consultants to fully comply with such Prevailing Wage Laws. City shall provide Designer with a copy of the prevailing rates of per diem wages in effect at the commencement of this Agreement. Designer shall make copies of the prevailing rates of per diem wages for each craft, classification or type of worker needed to execute the Services available to interested parties upon request, and shall post copies at the Designer's principal place of business and at the Project site. Designer shall defend, indemnify and hold the City, its officials, officers, employees and agents free and harmless from any claims, liabilities, costs, penalties or interest arising out of any failure or alleged failure of the Designer or its consultants to comply with the Prevailing Wage Laws. It shall be mandatory upon the Designer and all subconsultants to comply with all California Labor Code provisions, which include but are not limited to prevailing wages (Labor Code Sections 1771, 1774 and 1775), employment of apprentices (Labor Code Section 1777.5), certified payroll records (Labor Code Sections 1771.4 and 1776), hours of labor (Labor Code Sections 1813 and 1815) and debarment of contractors and subcontractors (Labor Code Section 1777.1). The requirement to submit certified payroll records directly to the Labor Commissioner under Labor Code section 1771.4 shall not apply to work performed on a public works project that is exempt pursuant to the small project exemption specified in Labor Code Section 1771.4.

3.9.4 Registration. If the Services are being performed as part of an applicable "public works" or "maintenance" project, then pursuant to Labor Code Sections 1725.5 and 1771.1, the Designer and all subconsultants performing such Services must be registered with the Department of Industrial Relations. Designer shall maintain registration for the duration of the Project and require the same of any subconsultants, as applicable. Notwithstanding the foregoing, the contractor registration requirements mandated by Labor Code Sections 1725.5 and 1771.1 shall not apply to work performed on a public works project that is exempt pursuant to the small project exemption specified in Labor Code Sections 1725.5 and 1771.1.

3.9.5 Labor Compliance. This Project may also be subject to compliance monitoring and enforcement by the Department of Industrial Relations. It shall be Designer's sole responsibility to comply with all applicable registration and labor compliance requirements. Any stop orders issued by the Department of Industrial Relations against Designer or any subcontractor that affect Designer's performance of Services, including any delay, shall be Designer's sole responsibility. Any delay arising out of or resulting from such stop orders shall be considered Designer caused delay and shall not be compensable by the City. Designer shall defend, indemnify and hold the City, its officials, officers, employees and agents free and harmless from any claim or liability arising out of stop orders issued by the Department of Industrial Relations against Designer or any subcontractor.

3.10 Notice to Proceed.

Designer shall not proceed with performance of any Services under this Agreement unless and until the City provides a written notice to proceed.

3.11 Termination, Suspension and Abandonment.

3.11.1 Grounds for Termination; Designer's Termination for Cause. City hereby reserves the right to suspend or abandon, at any time and for any reason, all or any portion of the Project and the construction work thereon, or to terminate this Agreement at any time with or without cause. Designer shall be provided with at least seven (7) days advanced written notice of such suspension, abandonment or termination. In the event of such suspension, abandonment or termination, Designer shall be paid for Services and reimbursable expenses rendered up to the date of such suspension, abandonment or termination, pursuant to the schedule of payments provided for in this Agreement, less any claims against or damages suffered by City as a result of the default, if any, by Designer. Designer hereby expressly waives any and all claims for damages or compensation arising under this Agreement, except as set forth herein, in the event of such suspension, abandonment or termination. Designer may terminate this Agreement for substantial breach of performance by the City such as failure to make payment to Designer as provided in this Agreement.

3.11.2 Documents and Other Data. Upon suspension, abandonment or termination, Designer shall provide to City all documents, reports, and any other data or drawings ("Project Documents"), as defined below, to which City would have been entitled at the completion of Designer's Services under this Agreement. Upon payment of the amount required to be paid to Designer pursuant to the termination provisions of this Agreement, City shall have the rights, as provided in this Agreement hereinafter, to use such Project Documents prepared by or on behalf of Designer under this Agreement. Designer shall make such documents available to City upon request and without additional compensation other than as may be approved as a reimbursable expense.

3.11.3 Employment of other Designers. In the event this Agreement is terminated in whole or in part as provided herein, City may procure, upon such terms and in such manner as it may determine appropriate, services similar to those terminated.

3.12 Ownership and Use of Documents; Confidentiality.

3.12.1 Ownership. All Project Documents shall be and remain the property of City.

3.12.2 Right to Use. Designer grants to City the right to use and reuse all or part of the Project Documents, at City's sole discretion and with no additional compensation to Designer.

3.13 Indemnification.

3.14.1 To the fullest extent permitted by law, Designer shall defend (with counsel of City's choosing), indemnify and hold the City, its officials, officers, employees, volunteers, and agents free and harmless from any and all claims, demands, causes of action, costs, expenses, liability, loss, damage or injury of any kind, in law or equity, to property or persons, including wrongful death, in any manner arising out of, pertaining to, or incident to any acts, errors or omissions, or willful misconduct of Designer, its officials, officers, employees, subcontractors, consultants or agents in connection with the performance of the Designer's services, the Project or this Agreement, including without limitation the payment of all damages, expert witness fees and attorney's fees and other related costs and expenses. Designer's obligation to indemnify shall not be restricted to insurance proceeds, if any, received by Designer, the City, its officials, officers, employees, agents, or volunteers.

3.14.2 If Designer's obligation to defend, indemnify, and/or hold harmless arises out of Designer's performance of "design professional" services (as that term is defined under Civil Code section 2782.8), then, and only to the extent required by Civil Code section 2782.8, which is fully incorporated herein, Designer's indemnification obligation shall be limited to claims that arise out of, pertain to, or relate to the negligence, recklessness, or willful misconduct of the Designer, and, upon Designer obtaining a final adjudication by a court of competent jurisdiction, Designer's liability for such claim, including the cost to defend, shall not exceed the Designer's proportionate percentage of fault.

3.14 Insurance. Designer shall not commence work under this Agreement until it has provided evidence satisfactory to the City that it has secured all insurance required under this Section. In addition, Designer shall not allow any subconsultant to commence work on any subcontract until it has provided evidence satisfactory to the City that the subconsultant has secured all insurance required under this section.

3.14.1 Types of Insurance Required. As a condition precedent to the effectiveness of this Agreement for work to be performed hereunder, and without limiting the indemnity provisions of the Agreement, Designer shall, at its expense, procure and maintain in full force and effect for the duration of the Agreement the following policies of insurance. If the existing policies do not meet the insurance requirements set forth herein, Designer agrees to amend, supplement or endorse the policies to do so.

3.14.2 Additional Insured. The City, its officials, officers, employees, agents, and volunteers shall be named as additional insureds on Designer's and its subconsultants' policies of commercial general liability and automobile liability insurance using the endorsements and forms specified herein or exact equivalents.

3.14.3 Commercial General Liability

(a) The Designer shall take out and maintain, during the performance of all work under this Agreement, in amounts not less than specified herein, Commercial General Liability Insurance, in a form and with insurance companies acceptable to the City.

(b) Coverage for Commercial General Liability insurance shall be at least as broad as the following: Insurance Services Office Commercial General Liability coverage (Occurrence Form CG 00 01) or exact equivalent. Commercial General Liability Insurance must include coverage for the following:

(1) Bodily Injury and Property Damage

(2) Personal Injury/Advertising Injury

(3) Premises/Operations Liability

(4) Products/Completed Operations Liability

(5) Aggregate Limits that Apply per Project

(6) Explosion, Collapse and Underground (UCX) exclusion deleted

(7) Contractual Liability with respect to this Contract

(8) Broad Form Property Damage

(9) Independent Contractors Coverage

(c) The policy shall contain no endorsements or provisions limiting coverage for (1) contractual liability; (2) cross liability exclusion for claims or suits by one insured against another; (3) products/completed operations liability; or (4) contain any other exclusion contrary to the Agreement.

(d) The policy shall give City its officers, employees, agents and City designated volunteers additional insured status using ISO endorsement forms CG 20 10 10 01 and 20 37 10 01, or endorsements providing the exact same coverage.

(e) The general liability program may utilize either deductibles or provide coverage excess of a self-insured retention, subject to written approval by the City, and provided that such deductibles shall not apply to the City as an additional insured.

3.14.4 Automobile Liability

(a) At all times during the performance of the work under this Agreement, the Designer shall maintain Automobile Liability Insurance for bodily injury and property damage including coverage for owned, non-owned and hired vehicles, in a form and with insurance companies acceptable to the City.

(b) Coverage for automobile liability insurance shall be at least as broad as Insurance Services Office Form Number CA 00 01 covering automobile liability (Coverage Symbol 1, any auto).

(c) The policy shall give City, its officers, employees, agents and City designated volunteers additional insured status.

(d) Subject to written approval by the City, the automobile liability program may utilize deductibles, provided that such deductibles shall not apply to the City as an additional insured, but not a self-insured retention.

3.14.5 Workers' Compensation/Employer's Liability

(a) Designer certifies that he/she is aware of the provisions of Section 3700 of the California Labor Code which requires every employer to be insured against liability for workers' compensation or to undertake self-insurance in accordance with the provisions of that code, and he/she will comply with such provisions before commencing work under this Agreement.

(b) To the extent Designer has employees at any time during the term of this Agreement, at all times during the performance of the work under this Agreement, the Designer shall maintain full compensation insurance for all persons employed directly by him/her to carry out the work contemplated under this Agreement, all in accordance with the "Workers' Compensation and Insurance Act," Division IV of the Labor Code of the State of California and any acts amendatory thereof, and Employer's Liability Coverage in amounts indicated herein.

Designer shall require all subconsultants to obtain and maintain, for the period required by this Agreement, workers' compensation coverage of the same type and limits as specified in this Section.

3.14.6 Professional Liability (Errors and Omissions)

(a) At all times during the performance of the work under this Agreement the Designer shall maintain professional liability or Errors and Omissions insurance appropriate to its profession, in a form and with insurance companies acceptable to the City and in an amount indicated herein. This insurance shall be endorsed to include contractual liability applicable to this Agreement and shall be written on a policy form coverage specifically designed to protect against acts, errors or omissions of the Designer. "Covered Professional Services" as designated in the policy must specifically include work performed under this Agreement. The policy must "pay on behalf of" the insured and must include a provision establishing the insurer's duty to defend.

3.14.7 Minimum Policy Limits Required

(a) The following insurance limits are required for the Agreement:

	Combined Single Limit
Commercial General Liability	$1,000,000 per occurrence/ $2,000,000 aggregate for bodily injury, personal injury, and property damage
Automobile Liability	$1,000,000 combined single limit
Employer's Liability	$1,000,000 per accident or disease
Professional Liability	$1,000,000 per claim and aggregate (errors and omissions)

(b) Defense costs shall be payable in addition to the limits.

(c) Requirements of specific coverage or limits contained in this Section are not intended as a limitation on coverage, limits, or other requirement, or a waiver of any coverage normally provided by any insurance. Any available coverage shall be provided to the parties required to be named as Additional Insured pursuant to this Agreement.

3.14.8 Evidence Required

(a) Prior to execution of the Agreement, the Designer shall file with the City evidence of insurance from an insurer or insurers certifying to the coverage of all insurance required herein. Such evidence shall include original copies of the ISO CG 00 01 (or insurer's equivalent) signed by the insurer's representative and Certificate of Insurance (Acord Form 25-S or equivalent), together with required endorsements. All evidence of insurance shall be signed by a properly authorized officer, agent, or qualified representative of the insurer and shall certify the names of the insured, any additional insureds, where appropriate, the type and amount of the insurance, the location and operations to which the insurance applies, and the expiration date of such insurance.

3.14.9 Policy Provisions Required

(a) Designer shall provide the City at least thirty (30) days prior written notice of cancellation of any policy required by this Agreement, except that the Designer shall provide at least ten (10) days prior written notice of cancellation of any such policy due to non-payment of premium. If any of the required coverage is cancelled or expires during the term of this Agreement, the Designer shall deliver renewal certificate(s) including the General Liability Additional Insured Endorsement to the City at least ten (10) days prior to the effective date of cancellation or expiration.

(b) The Commercial General Liability Policy and Automobile Policy shall each contain a provision stating that Designer's policy is primary insurance and that any insurance, self-insurance or other coverage maintained by the City or any named insureds shall not be called upon to contribute to any loss.

(c) The retroactive date (if any) of each policy is to be no later than the effective date of this Agreement. Designer shall maintain such coverage continuously for a period of at least three years after the completion of the work under this Agreement. Designer shall purchase a one (1) year extended reporting period A) if the retroactive date is advanced past the effective date of this Agreement; B) if the policy is cancelled or not renewed; or C) if the policy is replaced by another claims-made policy with a retroactive date subsequent to the effective date of this Agreement.

(d) All required insurance coverages, except for the professional liability coverage, shall contain or be endorsed to waiver of subrogation in favor of the City, its officials, officers, employees, agents, and volunteers or shall specifically allow Designer or others providing insurance evidence in compliance with these specifications to waive their right of recovery prior to a loss. Designer hereby waives its own right of recovery against City, and shall require similar written express waivers and insurance clauses from each of its subconsultants.

(e) The limits set forth herein shall apply separately to each insured against whom claims are made or suits are brought, except with respect to the limits of liability. Further the limits set forth herein shall not be construed to relieve the Designer from liability in excess of such coverage, nor shall it limit the Designer's indemnification obligations to the City and shall not preclude the City from taking such other actions available to the City under other provisions of the Agreement or law.

3.14.10 Qualifying Insurers

(a) All policies required shall be issued by acceptable insurance companies, as determined by the City, which satisfy the following minimum requirements: Each such policy shall be from a company or companies with a current A.M. Best's rating of no less than A:VII and admitted to transact in the business of insurance in the State of California, or otherwise allowed to place insurance through surplus line brokers under applicable provisions of the California Insurance Code or any federal law.

3.14.11 Additional Insurance Provisions

(a) The foregoing requirements as to the types and limits of insurance coverage to be maintained by Designer, and any approval of said insurance by the City, is not intended to and shall not in any manner limit or qualify the liabilities and obligations otherwise

assumed by the Designer pursuant to this Agreement, including but not limited to, the provisions concerning indemnification.

(b) If at any time during the life of the Agreement, any policy of insurance required under this Agreement does not comply with these specifications or is canceled and not replaced, City has the right but not the duty to obtain the insurance it deems necessary and any premium paid by City will be promptly reimbursed by Designer or City will withhold amounts sufficient to pay premium from Designer payments. In the alternative, City may cancel this Agreement.

(c) The City may require the Designer to provide complete copies of all insurance policies in effect for the duration of the Project.

(d) Neither the City nor any of the officials, officers, employees, agents or volunteers shall be personally responsible for any liability arising under or by virtue of this Agreement.

3.14.12 Subconsultant Insurance Requirements

(a) Designer shall not allow any subcontractors or subconsultants to commence work on any subcontract until they have provided evidence satisfactory to the City that they have secured all insurance required under this Section. Policies of commercial general liability insurance provided by such subcontractors or subconsultants shall be endorsed to name the City as an additional insured using ISO form CG 20 38 04 13 or an endorsement providing the exact same coverage. If requested by Designer, City may approve different scopes or minimum limits of insurance for particular subcontractors or subconsultants.

3.15 Records.

Designer shall maintain complete and accurate records with respect to all costs and expenses incurred under this Agreement. All such records shall be clearly identifiable. Designer shall allow a representative of City during normal business hours to examine, audit, and make transcripts or copies of such records and any other documents created pursuant to this Agreement. Designer shall allow inspection of all work, data, documents, proceedings, and activities related to the Agreement for a period of five (5) years from the date of final payment under this Agreement.

3.16 Limitation of Agreement.

This Agreement is limited to and includes only the work included in the Project described herein. Any additional or subsequent construction at the site of the Project, or at any other City site, will be covered by, and be the subject of, a separate Agreement for design services between City and the designer chosen therefor by City.

3.17 Mediation.

Disputes arising from this Agreement may be submitted to mediation if mutually agreeable to the parties hereto. The type and process of mediation to be utilized shall be subject to the mutual agreement of the parties.

3.18 No Third Party Rights.

This Agreement shall not create any rights in, or inure to the benefits of, any third party except as expressly provided herein.

3.19 Governing Law.

This Agreement shall be construed in accordance with, and governed by, the laws of the State of California. Venue shall be in the Superior Court of California for the County of Los Angeles.

3.20 Exhibits and Recitals.

All exhibits and recitals contained herein and attached hereto are material parts of this Agreement and are incorporated as if fully set forth.

3.21 Severability.

Should any provision in the Agreement be held by a court of competent jurisdiction to be invalid, void, or unenforceable, the remaining provisions shall continue in full force and effect.

3.22 Non-Waiver.

None of the provisions of this Agreement shall be considered waived by either party, unless such waiver is specifically specified in writing.

3.23 Safety.

Designer shall execute and maintain its work so as to avoid injury or damage to any person or property. In carrying out its Services, the Designer shall at all times be in compliance with all applicable local, state and federal laws, rules and regulations, and shall exercise all necessary precautions for the safety of its employees, consultant and subcontractors appropriate to the nature of the work and the conditions under which the work is to be performed.

3.24 Harassment Policy.

Delivery of Notices.

All notices permitted or required under this Agreement shall be given to the respective parties at the following address, or at such other address as the respective parties may provide in writing for this purpose:

City of Rolling Hills	Hot Line Construction, Inc.
Attn: Christian Horvath	Attn: Mark Meekhof
2 Portuguesa Bend Road	9020 Brentwood Blvd., Suite H
Rolling Hills, CA 90274	Brentwood, CA 94513

Such notice shall be deemed made when personally delivered or when mailed, forty-eight (48) hours after deposit in the U.S. Mail, first class postage prepaid and addressed to the party at its applicable address. Actual notice shall be deemed adequate notice on the date actual notice occurred, regardless of the method of service.

3.25 Time of Essence.

Time is of the essence for each and every provision of this Agreement.

3.26 City's Right to Employ Other Consultants.

City reserves right to employ other consultants, including designers, in connection with this Project or other projects.

3.27 Prohibited Interests.

3.27.1 Solicitation. Designer maintains and warrants that it has not employed nor retained any company or person, other than a bona fide employee working solely for Designer, to solicit or secure this Agreement. Further, Designer warrants that it has not paid nor has it agreed to pay any company or person, other than a bona fide employee working solely for Designer, any fee, commission, percentage, brokerage fee, gift or other consideration contingent upon or resulting from the award or making of this Agreement. For breach or violation of this warranty, City shall have the right to rescind this Agreement without liability.

3.27.2 Conflict of Interest. For the term of this Agreement, no director, official, officer or employee of City, during the term of his or her service with City, shall have any direct interest in this Agreement, or obtain any present or anticipated material benefit arising therefrom.

3.28 Labor Certification.

By its signature hereunder, Designer certifies that it is aware of the provisions of Section 3700 of the California Labor Code which require every employer to be insured against liability for Worker's Compensation or to undertake self-insurance in accordance with the provisions of that Code, and agrees to comply with such provisions before commencing the performance of the Services.

3.29 Subcontracting.

As specified in this Agreement, Designer shall not subcontract any portion of the Services required by this Agreement, except as expressly stated herein, without prior written approval of City. Subcontracts, if any, shall contain a provision making them subject to each and every provision of this Agreement.

3.30 Supplemental Conditions.

Any supplemental conditions shall be attached as an exhibit to this Agreement, and that exhibit shall be incorporated herein by reference.

3.31 Entire Agreement.

This Agreement, with its exhibits, contains the entire agreement of the parties hereto, and supersedes any and all other prior or contemporaneous negotiations, understandings and oral or written agreements between the parties hereto. Each party acknowledges that no representations, inducements, promises or agreements have been made by any person which are not incorporated herein, and that any other agreements shall be void. Furthermore, any modification of this Agreement shall only be effective if in writing signed by all parties hereto.

[SIGNATURES ON FOLLOWING PAGE]

IN WITNESS WHEREOF, the parties hereto have executed this Agreement on the date and year written below.

CITY OF ROLLING HILLS **HOT LINE CONSTRUCTION, INC.**

_____ _____

KARINA BAÑALES, City Manager MARK MEEKHOF,

DATE:_____ DATE:_____

ATTEST:

_____

CITY CLERK

APPROVED AS TO FORM:

_____

PATRICK DONEGAN
CITY ATTORNEY

EXHIBIT “A”

DESIGNER’S SCOPE OF SERVICES

.

City of Rolling Hills

INCORPORATED JANUARY 24, 1957

NO. 2 PORTUGUESE BEND
ROAD ROLLING HILLS, CA
90274
(310) 377-1521
FAX (310) 377-7288

REQUEST FOR PROPOSALS
POTHOLING SERVICES IN SUPPORT OF
EASTFIELD DRIVE SCE RULE 20B PROJECT
FOR CITY OF ROLLING HILLS

PROPOSALS DUE 3 PM, April 9, 2024

SECTION 1 - BACKGROUND

The City of Rolling Hills (City), California invites firms familiar with Southern California Edison (SCE) potholing requirements to submit fee proposals for performing potholing services in support of the Eastfield Drive SCE Rule 20B Utility Undergrounding project. This project will underground existing overhead power and telecommunication lines along Eastfield Drive from approximately 45 Eastfield Drive to Outrider Road.

The City has received federal hazard mitigation grant funding in support of undergrounding existing overhead utilities to reduce fire hazards. In cooperation with SCE and other utility companies utilizing existing overhead facilities, SCE has prepared preliminary design plans for the defined project area. Under terms of the grant funding, the City is responsible to construct the underground infrastructure utilizing SCE's design. Prior to finalizing the design, SCE requires potholing to confirm the vault locations.

The successful Proposer, shall have at least five years of experience on similar types of projects. All Proposers responding to this Request for Proposal (RFP) will be evaluated on the basis of their fee. Note: all roads within the City are private and coordination with the Rolling Hills Community Association (RHCA) may also be required.

SECTION 2 - SCOPE OF SERVICES

The City of Rolling Hills is requesting a fee from selected firms that have experience in performing potholing services for SCE to validate vault locations as currently designed. Being a City project, prevailing wage is a requirement. The proposed vault locations are proposed in or adjacent to an existing two-lane road (one-lane each direction).

Scope of work includes:

1. Potholing for 6 vault locations as identified on SCE's Preliminary Design Plans for the Rule 2B Project (see Attachment 1)
2. Obtaining the required permit (no fee) from RHCA (see Attachment 2)
3. Restoring the potholing trenches in accordance with RHCA Trench Backfill and Pavement Repairs (see Attachment 3)
4. Provide appropriate Traffic Control, including flagmen where deemed necessary.

SECTION 3 - PROPOSAL REQUIREMENTS

Proposals will be considered from firms with experience and success in performing potholing services for SCE and based on fee. Please submit the following for consideration.

1. Lump Sum Fee
2. Submit hourly fee schedule for any additional services that may be required.
3. Any exceptions to the contract agreement the selected firm will be required to sign.

SECTION 4 - PROPOSAL PROCEDURE

All proposals are due no later than 3 pm on April 9, 2024. The City reserves the right to extend the deadline. The City will respond to request for clarification in written RFP addendum(s) as needed. All inquiries shall be directed to Christian Horvath at chorvath@cityofrh.net by 5 pm on April 3, 2024.

Please submit the proposal via email to:

Christian Horvath
City Clerk
chorvath@cityofrh.net

Submission of a proposal indicates acceptance by the firm of the conditions contained in this request for proposal unless clearly and specifically noted in the proposal submitted and confirmed in the agreement between the City of Rolling Hills and the firm selected. The City of Rolling Hills reserves the right without prejudice to reject any or all proposals. No reimbursement will be made by the City for costs incurred in the preparation of the response to this Request for Proposal. Submitted materials will not be returned and become the property of the City of Rolling Hills.

SECTION 5 – SELECTION/EVALUATION CRITERIA

Proposals will be evaluated on fee / hourly fee schedule submitted.

SECTION 6 - ATTACHMENTS

Attachment 1 – SCE Preliminary Design Plans
Attachment 2 – Rolling Hills Community Association Permit Application
Attachment 3 – Rolling Hills Community Association Trench Backfill and Pavement Repair Requirements

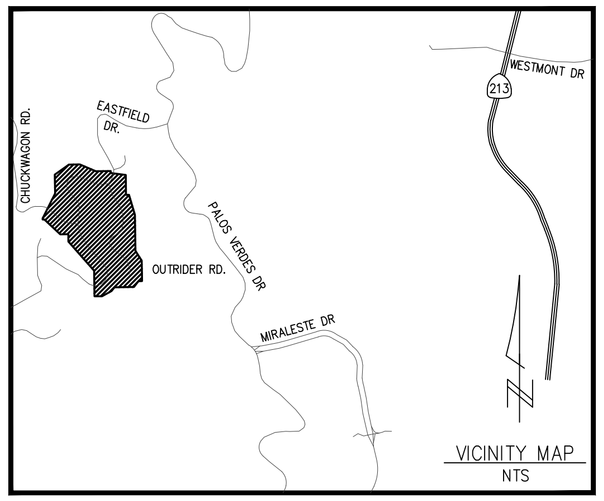

VICINITY MAP
NTS

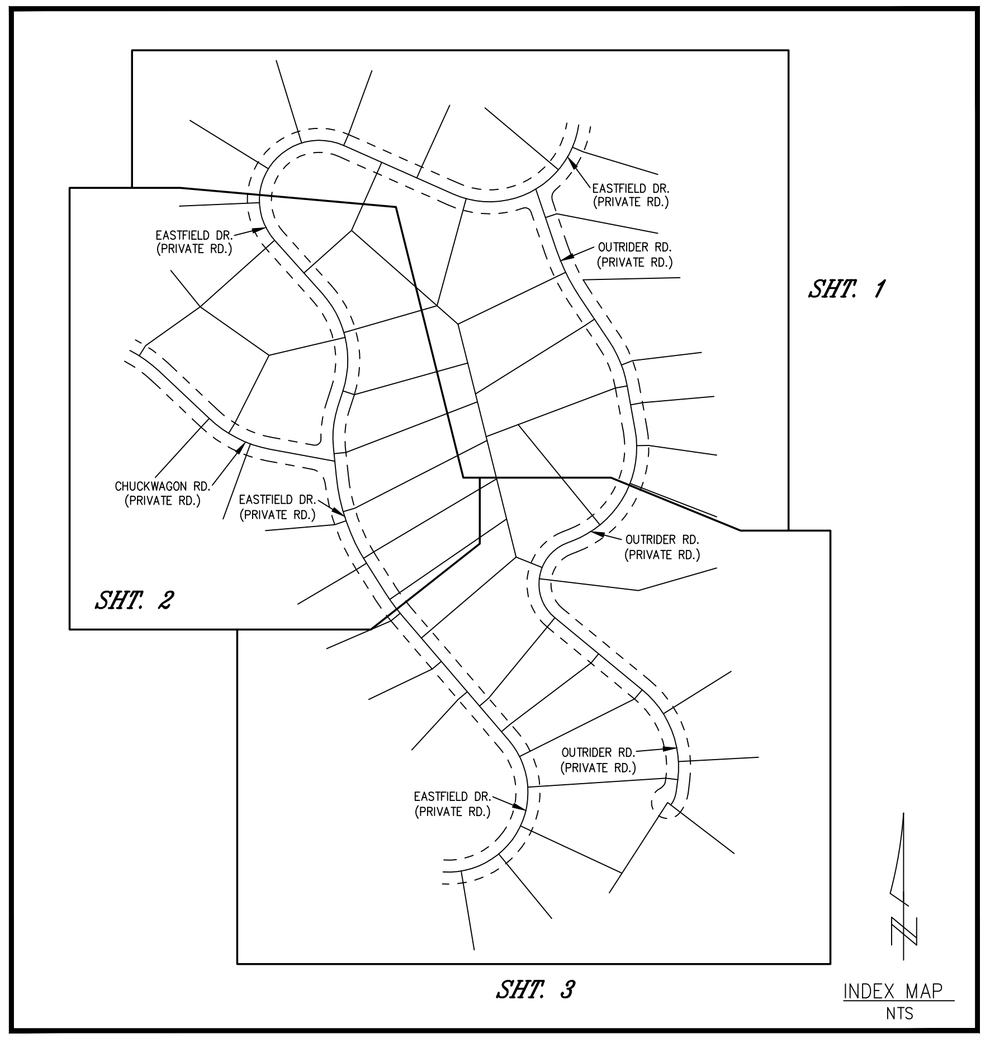

INDEX MAP
NTS

NOTE TO CREW:
WORK WITH RELATED TD2111183 R20B OH REMOVAL

ATTACHMENT 1

CITY OF ROLLING HILLS

TD2111184 2QQ RULE 20B INSTALL UG

STATLER 16KV % WALTERIA SUB

PROJECT REQUIREMENTS (Y/N)

EDISON EASEMENT REQUIRED	Y
PWRD 88 REQUIRED	Y
UG CIVIL ONLY WORK ORDER	Y
PERMIT REQUIRED	Y
PERMIT TYPE: ENCROACHMENT	
OUTAGE REQUIRED	Y
OUTAGE DATE: TBD TIME: TBD	
TRAFFIC CONTROL REQUIRED	Y
PED. TRAFFIC CONTROL REQ'D	N
CONVEYANCE LETTER REQ'D	N
ENVIRONMENTAL REQUIREMENTS DOCUMENT (ERD) REQUIRED	Y
CSD 140 (TLM) REQ'D	Y
CIRCUIT MAP CHANGE REQ'D (TD 203)	
DIG ALERT APP	Y
VERIFIED ACTIVE AND CONFIRMED USA TICKETS	Y
UTILIQUEST NOTIFIED	Y

STANDARD ADHERENCE: 04 Q/2023 Y

D124: Rev. 03/21/23

INVENTORY MAP NO.'S

LT-7636-G	LT-7635-A2
LT-7636-H	LT-7635-A4
LT-7635-A	LT-7635-B1
LT-7635-B	LT-7635-C1
LT-7635-C	LT-7635-C2
LT-7635-D	LT-7635-C3
LT-7636-G4	LT-7635-C4
LT-7636-H3	LT-7635-E2

INSTALL METHOD:
☐ EDISON
☐ APPLICANT

D127A: Rev. 11/10/20

PRELIMINARY
Not For Construction

DISTRICT 44 – SOUTH BAY	PROJ. MGR. WILLIAMS, JENNA J PHONE 714-430-7842	PLANNER WILLIAMS, JENNA J PHONE 310-720-6086	DESIGNER CHIN, ELIZABETH
PROJECT NO. 2612821 / SERVICE REQUEST 3500715	MSR NO.	PRODUCT-1 2111184-RULE 20B-UG INSTALL	ASSOC DESGN
CIRCUIT / VOLTAGE STATLER 16KV	GPS	PRODUCT-2	ASSOC DESGN
SUB / PG NO. WALTERIA SUB	CIRCUIT CODE	PRODUCT-3	ASSOC DESGN
INVENTORY MAP VARIOUS	J.P.A. NO.	PROPOSED CONSTRUCTION (LOCATION) RULE 20B 45 EASTFIELD DR ROLLING HILLS CA 90274	

TYPE	DATE	APPROVED BY	CHECKED BY	DRAWN BY	PAX #
P	12/29/2023	MUDILA K	J WILLIAMS	E CHIN	16484
P	10/10/2023	MUDILA K	J WILLIAMS	E CHIN	16484

Southern California Edison Company

SHEET 1 OF 7

DESIGN\DRWG NO. 1608857_0.01

UNDERGROUND SERVICE ALERT
Contact USA
Dial 811 or 800-422-4133
www.digalert.org/contact
For Underground Locating
Two Working Days Before You Dig

D16: Rev. 05/28/20

FILE NAME:1608857_0.01.DWG SAVE DATE:12/30/2023 12:44 PM SAVED BY:CHINE1

GROUND CONNECTION INSTALLATION IN A PVC VENT SEE UGS AC 760.1

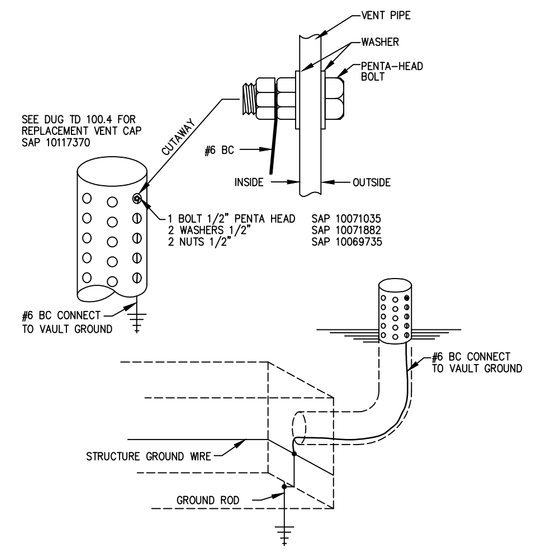

NOTE:

TO ASSIST IN UNDERGROUND STRUCTURE LOCATING FROM THE SURFACE, INSTALL A #6 BARE COPPER WIRE FROM INSIDE THE VENT PIPE TO THE STRUCTURE GROUND SYSTEM. THIS INSTALLATION WILL ALLOW A SINGLE PERSON CREW TO TIE INTO THE SYSTEM GROUND AND LOCATE THE FACILITIES UNAIDED. THE INSTALLATION SHOULD BE MADE DURING NEW CONSTRUCTION, ADDED TO THE APPROPRIATE STRUCTURE DURING THE ROUTINE MAINTENANCE CYCLE, OR AS THE NEED ARISES BY REQUEST FOR ASSISTANCE FROM THE CONTRACT CABLE LOCATING COMPANY.

D37: REV. 10/26/20

GROUND CONNECTION INSTALLATION IN A POLYETHYLENE VENT SEE UGS AC 760.2

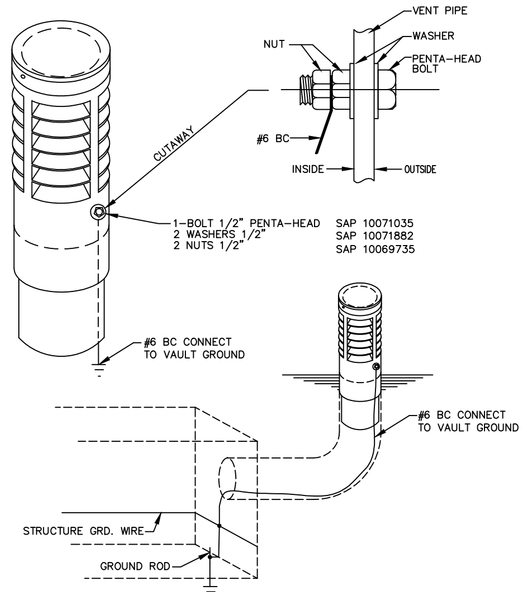

NOTES:

1. TO ASSIST IN UNDERGROUND STRUCTURE LOCATING FROM THE SURFACE, INSTALL A #6 BARE COPPER WIRE FROM INSIDE THE VENT PIPE TO THE STRUCTURE GROUND SYSTEM. THIS INSTALLATION WILL ALLOW A SINGLE PERSON CREW TO TIE INTO THE SYSTEM GROUND AND LOCATE THE FACILITIES UNAIDED. THE INSTALLATION SHALL BE MADE TO A MINIMUM OF ONE VENT PER VAULT DURING NEW CONSTRUCTION, ADDED TO THE APPROPRIATE STRUCTURES DURING THE ROUTINE MAINTENANCE CYCLE, OR AS THE NEED ARISES BY REQUEST FOR ASSISTANCE FROM THE CONTRACT CABLE LOCATING COMPANY.
2. DRILL A 9/16" HOLE FOR GROUNDING BOLT APPROXIMATELY ONE INCH BELOW THE LOWEST VENTILATION FIN SLOT. THE GROUND CONNECTION SHOULD BE ATTACHED ON THE SIDE OF THE VENT FACING AWAY FROM THE STREET. THIS IS DONE TO MAINTAIN A FLAT SURFACE FOR ATTACHING STRUCTURE IDENTIFICATION STICKERS.

D103: REV. 10/26/20

CITY OF ROLLING HILLS

TD2111184 2QQ RULE 20B INSTALL UG

STATLER 16KV % WALTERIA SUB

NOTE TO CREW:
WORK WITH RELATED TD2111183 R20B OH REMOVAL

TIE–IN MADE INTO A SECONDARY HANDHOLE

If PVC conduit is used, riser bend installation may be made by the customer with prior SCE approval. Customer not to remove handhole cover. If metallic conduit is used or handhole cover needs to be removed, a SCE Qualified Person must be present.

NOTE:
ALL ELECTRICAL DUCTS AND STRUCTURES WILL CONFORM TO GENERAL ORDER #128 (RULES FOR CONSTRUCTION OF UNDERGROUND ELECTRICAL SUPPLY AND COMMUNICATION PRESCRIBED BY THE PUBLIC UTILITIES COMMISSION OF THE STATE OF CALIFORNIA, JANUARY 2006).

RUN NUMBER CALL–OUTS AS FOLLOWS:

(1) – (199) MAINLINE CONDUIT
(200) – (599) SERVICE CONDUIT
(600) – (799) STREET LIGHT CONDUIT

D84: Rev. 10/26/20

WHERE CONDUITS ARE PICKED UP OR INTERCEPTED, CONDUIT SHALL BE MANDRELLED AND PULL ROPE INSTALLED FROM TERMINAL TO TERMINAL.

CONSTRUCTION NOTES:

Unless otherwise specified on the working drawing which forms a part of the specification, the Contractor/Developer shall furnish the following items at no cost to the Edison Company.

Southern California Edison Company has attempted to correctly show all existing utilities and substructures in the vicinity of the work, but does not guarantee there are no other substructures in the area. Failure of SCE to show all substructures in their correct location will not be a basis for a claim for extra work, and the contractor shall be responsible for all damages to substructures whether shown or not.

1. FOR GENERAL SPECIFICATIONS SEE UGS GI 001.

2. CONDUIT:
   a. Minimum cover in street or parkway is 30" below gutter grade, unless noted otherwise.
   b. Minimum cover on private property is 30" below finished grade, unless noted otherwise.
   c. Contractor is to furnish and install approved conduit to Edison specifications per UGS CD 100.1, 110 AND 120.
   d. For the type of conduit for this job, See UGS CD 110.1.
   e. Install all risers per UGS CD 160, 161, 162 and 170.
   f. Cap all mainline conduits per UGS CD 148 and service conduits per UGS CD 150.
   g. Install blank conduit plugs in all conduits terminating into Vaults, Manhole's, PMH's, SOE's & all cap locations, per UGS CD 180.1 & UGS CD 180.2
   h. Install pull rope in all conduit runs. Pull rope to be at least 3/8" polypropylene rope, braided or twisted. For specifications, approved makes, and suppliers, see UGS GI 040.
   i. All conduit must be mandreled with the approved mandrel UGS CD 197.

3. CONDUIT RADIUS REQUIREMENTS:
   a: The minimum radius for bends are:
      36" for conduits 3" in diameter or smaller
      48" for conduits 4" and 5" in diameter
      60" for 6" diameter conduit
   b: The minimum radius for all sweeps of all mainline conduits is 12'–6" (unless noted otherwise).

4. EXCAVATION AND BACKFILL:
   a. Work area shall be cleared and rough graded to within four inches of final grade prior to installation of Edison conduit or structures.
   b. All excavations shall be in accordance with the California State Construction Safety Orders (when applicable), Edison specifications, and all governing local ordinances.
   c. Each trench to be a uniform depth below final grade prior to installation of Edison conduit or structures.
   d. Backfill shall be provided by the Contractor for all excavations and shall include crushed rock, concrete, and/or imported backfill, when required.
   e. Backfill with a MINIMUM of one sack per yard sand cement slurry around and over vaults and manholes per UGS GI 030, section 6.4 and around PMH's within one foot of finished grade, per UGS SS 590.1.
   f. Backfill, per Edison specifications, shall immediately follow conduit or substructure installation. At no time shall conduit be left exposed over 24 hours.
   g. No rocks are allowed within 12 inches of direct–buried cables or any conduit without concrete encasement. Native backfill capable of passing through a one–half inch mesh screen shall be considered to be "rock free". If existing backfill does not pass through a 1/2" screen, place imported sand 3" below and 12" above Edison cables. After this point, no rocks larger than 12" diameter are permitted.
   h. All backfill shall be compacted to meet or exceed local ordinances or other requirements. It shall be placed in a manner that will not damage the conduit or substructure or allow future subsidence of the trench or structures.

5. PAVING:
   Repaving, where required, shall be placed in such a manner that interference with traffic, including pedestrian traffic, will be kept to a minimum. The Contractor shall establish a program of repaving acceptable to the Municipality, County, or other authority having jurisdiction and which is acceptable to Edison.

6. STRUCTURES:
   a. All substructures shall be constructed or installed to Edison specifications.
   b. Install protection barriers per UGS MS 830 when required in areas exposed to traffic, per Edison Inspector.
   c. All conduit lines and concrete floored substructures shall be water tight.
   d. All grounding materials shall be furnished and installed by the Contractor.

7. RETAINING WALLS:
   When required, retaining walls shall be provided by the Developer. Walls are required wherever grade rises more than 18 inches above the structure or 24" above the pad surface at a distance of 5 feet from the same, or in areas subject to erosion. Design and installation must comply with local building ordinances. Refer to Edison Inspector for typical space requirements.

8. PERMITS:
   All permits necessary for excavation shall be provided by the Contractor/Developer.

9. ACCESS:
   Heavy truck access shall be maintained to equipment locations. Structures must be clear of all appurtenances that would obstruct the loading or unloading of equipment.

10. SERVICES:
    a. Meters and services shall comply with Edison Electrical Services Requirements.
    b. Wiring must be in accordance with applicable local ordinances and approved by local Inspection Authorities.

11. LOCATION:
    a. The location of excavations and structures for Edison shall be as shown on the working drawing. No deviation from the planned locations will be permitted unless approved by the Edison Inspector. See UGS GI 001, section 2.2.
    b. Actual location of obstructions, storm drains, and/or other foreign utilities to be the responsibility of the Contractor. See UGS GI 001, section 2.3.

12. Contractor is to verify location and widths of all sidewalks and driveways prior to street light installation. See UGS CD 175.1, UGS CD 175.2 and UGS CD 175.3.

13. SURVEY:
    Surveying of street improvements, property corners, lot lines, finished grade, etc., necessary for the installation of underground facilities must be completed and markers or stakes placed prior to the start of the installation. In addition, Developer shall maintain the markers during the installation and inspection by Edison. Grade and property line stakes must show any offset measurements.

14. COORDINATION AND SUPERVISION:
    The Developer shall provide supervision over and coordination among the various contractors working within the development in order to prevent damage to Edison facilities. He is responsible for the cost of repairs, replacement, relocation, or other corrections to Edison facilities made necessary by his failure to provide supervision or to otherwise comply with these specifications.

15. TELEPHONE AND OTHER UTILITY REQUIREMENTS:
    The drawing prepared for this job may also cover the facilities to be installed for the telephone company and/or other utility. Any questions concerning details of their installation should be referred to the company concerned.

16. OWNERSHIP:
    Developer is to deed to the Edison Company all structures shown hereon except those shown as customer owned.

17. WARRANTY:
    Applicants expressly represent and warrant that all work performed and all material used in meeting Applicants' obligations herein are free from defects in workmanship and are in conformity with Southern California Edison Company's requirements. This warranty shall commence upon receipt by Applicants of the Company's final acceptance and shall expire one year from that date. Applicants agree to promptly correct to the Company's satisfaction and that of any governmental agency having jurisdiction and at Applicant's expense any breach of this warranty which may become apparent through inspection or operation of underground electric system by Company during this warranty period.

18. INSPECTION:
    Inspection is required during the construction period. A 48 hour advance notice of intent to start construction is required from the contractor to the Southern California Edison Company. Standards of Edison construction requirements are available upon request.

Duct and Structure Inspector: MARIO SAUCEDO Phone: 310–502–1029

Cabling Construction Coordinator: Phone:

D05: Rev. 07/21/16

CONCRETE PRODUCTS

Precast concrete item complete with neck. Cover and inserts may be obtained from any of the following listed and approved manufacturers:

JENSEN PRECAST
14221 San Bernardino Ave., Fontana, Calif. 92335
Phone: (909) 350–4111
(800) 257–6100

OLDCASTLE PRECAST
10650 Hemlock Ave., Fontana, Calif. 92337
Phone: (909) 428–3700
(800) 626–3860

FOR HANDHOLE AND PULLBOX MANUFACTURERS, SEE UGS HP 200.

D41: Rev. 01/21/09

Applicants expressly represent and warrant that all work performed and all material used in meeting Applicants' obligations herein are free from defects in workmanship and are in conformity with Southern California Edison Company's requirements. This warranty shall commence upon receipt by Applicants of the Company's final acceptance and shall expire one year from that date. Applicants agree to promptly correct to the Company's satisfaction and that of any governmental agency having jurisdiction and at Applicants' expense any breach of this warranty which may become apparent through inspection or operation of underground electric system by the Company during this warranty period.

LEGEND OF DRAFTING SYMBOLS

TRENCH

- EDISON CONDUIT (DIST. & SL)
- CUST. OWNED CONDUIT
- RESIDENTIAL SERVICE CABLE
- E — EXISTING CONDUIT

STRUCTURES

- VAULT
- MANHOLE
- PME 3–5
- PME 6–12
- PULL BOX
- HANDHOLE
- SOE
- PAD
- 4'x4' BURD SWITCH ENCLOSURE
- 36" BURD SWITCH ENCLOSURE
- BURD TRANSFORMER ENCLOSURE
- STREET LIGHT ELECTROLIER
- C/I METER PANEL
- FIRE HYDRANT

D128: Rev. 11/10/20

CONTRACTOR/DEVELOPER NOTES

- TEMPORARY BARRIERS TO BE PLACED AROUND ALL EDISON STRUCTURES DURING CONSTRUCTION
- CUSTOMER TO VERIFY EXACT LOCATION OF STREET LIGHTS PRIOR TO INSTALLATION.
- WHERE SLEEVES OR STUB OUTS ARE INSTALLED, CONTRACTOR TO MANDREL AND INSTALL PULL ROPE
- ANY SERVICES THAT ARE NOT INSTALLED IN CONJUNCTION WITH THE MAIN LINE SYSTEM WILL REQUIRE A MINIMUM OF 3" CUSTOMER OWNED SERVICE CONDUIT AT THE TIME OF CONSTRUCTION OF THE HOME.
- DEVELOPER IS RESPONSIBLE FOR LOCATING EXISTING DUCT, SLEEVES, AND STUB OUTS. LOCATIONS SHOWN ON MAP ARE NOT GUARANTEED. IF NOT EXISTING, THE DEVELOPER MUST PROVIDE THESE ITEMS.

D129: Rev. 11/10/20

TIE–IN MADE INTO A SECONDARY HANDHOLE

If PVC conduit is used, riser bend installation may be made by the customer with prior SCE approval. Customer not to remove handhole cover. If metallic conduit is used or handhole cover needs to be removed, a SCE Qualified Person must be present.

WARNING
THE EXCAVATOR MUST TAKE ALL STEPS NECESSARY TO AVOID CONTACT WITH UNDERGROUND FACILITIES WHICH MAY RESULT IN INJURY TO PERSONS OR DAMAGE TO FACILITIES IN THE AREA. THE INDICATED LOCATIONS OF EDISON UNDERGROUND FACILITIES, AS PROVIDED, ARE BELIEVED TO BE ACCURATE. HOWEVER, THE FINAL DETERMINATION OF EXACT LOCATIONS AND THE COST OF REPAIR TO DAMAGED FACILITIES IS THE RESPONSIBILITY OF THE EXCAVATOR.

CUSTOMER–OWNED CONDUIT MATERIAL* AND CONCRETE ENCASEMENT ARE TO BE INSTALLED IN ACCORDANCE WITH EDISON ELECTRICAL SERVICE REQUIREMENTS.

*SUBJECT TO APPROVAL BY LOCAL INSPECTION AUTHORITIES

D14: Rev. 01/85

CONNECTING TO EXISTING SCE STRUCTURES

- Per SCE requirements, customers are not allowed to enter, intercept or tie–in to existing SCE facilities; e.g. structures, equipment, multi–conduit runs/banks, or conductors. These facilities may be energized and the work will only be performed by SCE. Contact the appropriate SCE inspector to schedule an appointment. Customers may connect to an existing conduit stub without a SCE inspector present.
- Multi–conduit runs/banks are runs of conduit in close proximity to each other and other SCE facilities. A conduit stub is a single empty conduit stub that is not in close proximity to other SCE owned facilities. Refer to the work order map for details.
- Per CPUC/SCE's Rule 15 B.1.A and Rule 16 D.1.A., the customer will provide all necessary excavations (with the exception of excavation under pads and primary splice boxes), material (including conduit and structures) and encasement, to be utilized in the intercept/tie–in process.
- The customer must adhere to all applicable Cal–OSHA, local, city, state and federal regulations, (including, but not limited to, all necessary shoring and traffic control in place to perform the intercept/tie–in work by SCE's underground civil contractor(s)).
- Intercept/tie–in work must be coordinated with SCE's civil contractors through the Division Inspector/P–Spec to limit exposure of excavation(s). Customer is responsible for securing excavation(s).

DOB: 11/13/18

TIE–IN MADE INTO A SECONDARY HANDHOLE

If PVC conduit is used, riser bend installation may be made by the customer with prior SCE approval. Customer not to remove handhole cover. If metallic conduit is used or handhole cover needs to be removed, a SCE Qualified Person must be present.

TYPICAL CONDUIT BANK SECTIONS (MAINLINE AND COMMERCIAL/INDUSTRIAL)

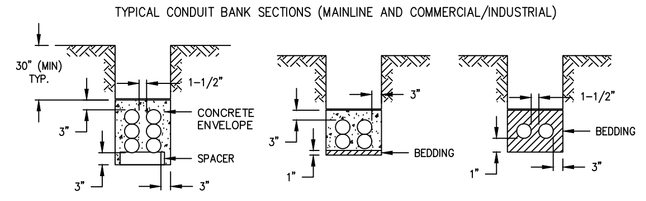

FULL ENCASEMENT MORE THAN 4 CONDUITS (BASE SPACER REQUIRED)

SEMI–ENCASEMENT 3 OR 4 CONDUITS

DIRECT BURIAL

SPECIAL CONDUIT FORMATIONS

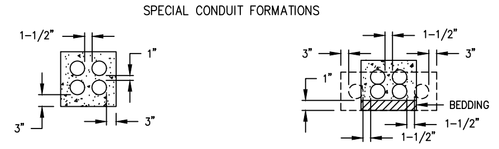

CONDUIT BANK TERMINATIONS MINIMUM SEPARATIONS REQUIRED BETWEEN ALL TYPES OF CONDUIT AT CONDUIT ENTRANCES TO SUBSTRUCTURES.

CONDUIT ROLLING USED ONLY WHEN SPECIFIED OR SANCTIONED FOR DUCTS TO OCCUPY MINIMUM VERTICAL SPACE AND MAINTAIN REQUIRED COVER.

NOTE(S):
1. SPACING AND CONCRETE COVERAGE AS SHOWN IS MINIMUM.
2. SPACERS, WHEN REQUIRED, WILL BE AS RECOMMENDED BY THE CONDUIT MANUFACTURER AND APPROVED BY THE COMPANY AND WILL BE PLACED AT THE INTERVALS SHOWN IN TABLE CD 120–1 (SHEET 1). VERTICAL SPACERS AND BASE SPACERS WILL BE MANUFACTURED FROM RIGID NONCOMPRESSABLE–TYPE MATERIALS. USE TEMPORARY MEANS TO MAINTAIN HORIZONTAL CONDUIT SPACING AT THESE INTERVALS UNTIL BACKFILL BEDDING OR ENCASEMENT IS PLACED.

TABLE CD 120–1: HORIZONTAL CONDUIT SPACING INTERVALS

CONDUIT SIZE	2"	3"	3–1/2"	4"	5"	6"
SPACING WITH ENCASEMENT	10'	10'		10'		
SPACING WITH NONENCASEMENT	10'	8'		6'		

3. BASE SPACERS ARE REQUIRED ON ALL BANKS OF MORE THAN FOUR CONDUITS.
4. THE CONDUIT WILL BE OF AN APPROVED MAKE AND MANUFACTURE AS SET FORTH IN STANDARDS CD 115.
5. TYPES:
   A. "EB" (TYPE I) FOR ENCASED AND SEMI–CASED INSTALLATIONS
   B. "DB" (TYPE II) FOR DIRECT BURIAL
   C. "SCH. 40" RIGID PVC FOR INSIDE BORE CASINGS
6. FOR GENERAL CONDUIT BANK, CONCRETE, AND TRENCHING REQUIREMENTS, SEE CD 100.
7. INSTALL BARE COPPER NEUTRAL WIRE ONLY WHEN SPECIFIED ON WORKING DRAWING. FOR MAINLINE APPLICATIONS (INCLUDING 4–WIRE TAPLINES) WHEN THE NEUTRAL IS PRESENT ON AN OVERHEAD STRUCTURE THAT FEEDS A PRIMARY RISER, THE NEUTRAL SHALL BE CONTINUOUS TO THE FIRST UNDERGROUND STRUCTURE. A BARE COPPER NEUTRAL WIRE, AS SPECIFIED ON THE WORKING DRAWING, SHALL BE PLACED, AND FULLY ENCASED IN CONCRETE, AT THE LOWER REGION OF THE DUCT BANK, PREFERABLY IN–BETWEEN CONDUITS.
8. CONCRETE ENCASEMENT WILL BE KEPT UNIFORM. EXCESSIVE AMOUNTS OF CONCRETE WILL BE AVOIDED.
9. BEDDING WILL BE IN ACCORDANCE WITH CD 100.

D70: 10/26/20

JOINT TRENCH INSTALLATION SEE UGS CD 120

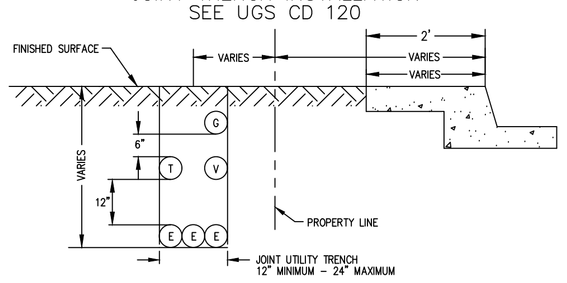

TYPICAL CONDUIT BANK SECTIONS (RESIDENTIAL ONLY)

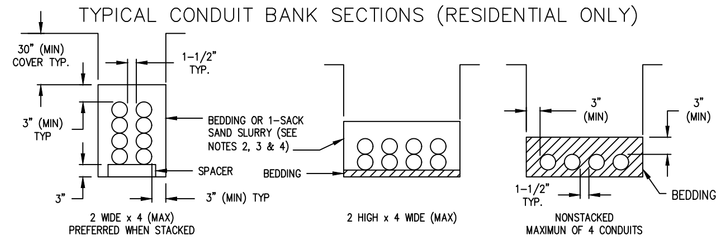

TYPICAL JOINT TRENCH SECTIONS

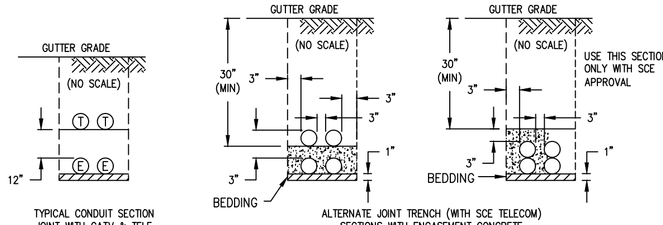

NOTE(S):
1. CONDUIT SECTIONS SHOULD HAVE NO MORE THAN EIGHT SCE CONDUITS, AND NO CONDUIT SHOULD BE SURROUNDED ON FOUR SIDES BY OTHER CONDUITS.
2. ANY CONDUIT SECTION WITH STACKED CONDUIT MUST BE BACKFILLED WITH BEDDING (SEE NOTE 4) OR ONE–SACK SAND SLURRY. (STANDARD SPECIFICATIONS FOR PUBLIC WORKS CONSTRUCTION SECTION 201–1.2 MIX 100–E–100.)
3. TWO–SACK CONCRETE ENCASEMENT PER CD 100 WILL BE USED IN JOINT TRENCH IN ORDER TO REDUCE TELECOM CONDUIT CLEARANCES TO THREE INCHES MINIMUM PER THE ABOVE JOINT TRENCH SECTIONS. ONE–SACK SAND SLURRY IS NOT A SUBSTITUTE FOR ENCASEMENT CONCRETE.
4. BEDDING MATERIAL WILL BE CLEAN SAND OR PEA GRAVEL; NATIVE MATERIALS MEETING THE REQUIREMENTS OF CD 100 ARE ONLY PERMITTED FOR THE NONSTACKED CONFIGURATION AND ARE NOT PERMITTED TO BED PADS AND RISERS AT BOXES.
5. CONDUIT WILL BE TYPE "DB" PER CD 110 AND WILL BE OF APPROVED MANUFACTURE PER CD 115. TYPE EB IS PERMITTED WHEN ENCASEMENT CONCRETE IS USED.
6. WHERE BOTH RESIDENTIAL AND NONRESIDENTIAL CONDUIT ARE IN THE SAME TRENCH, THE REQUIREMENTS OF SCOPE CD 120.1 SHALL APPLY.
7. SCOPE CD 120.1, SHEET 1 MAY BE USED FOR RESIDENTIAL CONSTRUCTION.
8. USE TEMPORARY SUPPORTS EVERY EIGHT FEET TO MAINTAIN HORIZONTAL CONDUIT ALIGNMENT. REMOVE AFTER CONCRETE IS PLACED.

D70A: 10/26/20

LEGEND OF CONDUIT SYMBOLS (CONVENTIONAL U. G.)

EDISON
NO. CONDUIT REQ'D. — SIZE OF CONDUIT
RUN NO. — LENGTH OF CONDUIT RUN

TRENCH
TYPE OF FACILITY (CIC–DB, ETC.) — LENGTH OF TRENCH
RUN NO.

STREET LIGHT
NO. CONDUIT REQ'D. — SIZE OF CONDUIT
RUN NO. — LENGTH OF CONDUIT RUN

STREET LIGHT TRENCH
TYPE OF FACILITY — LENGTH OF ADDITIONAL TRENCH REQ'D.
RUN NO.

EDISON
NO. CONDUIT REQ'D. — SIZE OF CONDUIT
REFERENCE RUN NO. — MEMO — DENOTES CONDUIT RUN CONTINUATION FOR CONSTRUCTION INFORMATION

STREET LIGHT
NO. CONDUIT REQ'D. — SIZE OF CONDUIT
REFERENCE RUN NO. — MEMO — DENOTES CONDUIT RUN CONTINUATION FOR CONSTRUCTION INFORMATION

ANY OF THE ABOVE SYMBOLS FOLLOWED BY A ✳

DENOTES THE FOLLOWING:

DB CONDUIT WITHOUT ENCASEMENT IS ACCEPTABLE FOR PORTIONS OF TRENCH WITH ONLY ONE OR TWO CONDUITS

SEMI–ENCASEMENT IS REQUIRED FOR PORTIONS OF TRENCH WITH ONLY THREE OR FOUR CONDUITS

FULL ENCASEMENT IS REQUIRED FOR MORE THAN FOUR CONDUITS

D18: Rev. 5/08/2006

CONDUIT RADIUS REQUIREMENTS:

A: The minimum radius for bends are:
36" for conduits 3" in diameter or smaller
48" for conduits 4" and 5" in diameter
60" for 6" diameter conduit
B: The minimum radius for sweeps are:
36" for conduits 3" in diameter or smaller
12'–6" for conduits 4" in diameter and larger, unless otherwise noted.

LEGEND CODE DEFINITIONS

CI – CUSTOMER CONTRACTOR INSTALLED: MATERIALS FURNISHED AND INSTALLED BY APPLICANT AT EDISON'S EXPENSE AND ARE DEEDED TO EDISON. (EXCEPTION: STREET LIGHT ELECTROLIERS WILL BE INSTALLED BY EDISON'S CONTRACTOR.)

CO – CUSTOMER CONTRACTOR OWNED: MATERIALS FURNISHED, INSTALLED, OWNED, AND MAINTAINED BY APPLICANT.

CF – CUSTOMER CONTRACTOR FURNISHED: MATERIALS FURNISHED AND INSTALLED BY APPLICANT AT APPLICANT'S EXPENSE THAT MAY BE DEEDED TO EDISON.

IN – INSTALL: MATERIALS FURNISHED AND INSTALLED BY APPLICANT IF APPLICANT INSTALLED PROJECT OR BY EDISON IF EDISON INSTALLED PROJECT. (EXCEPTION: FOR AN APPLICANT INSTALLED LINE EXTENSION, STATION NOS. _____ HAVING AN ASTERISK ADJACENT TO AN "IN" LEGEND CODE REPRESENTS MATERIALS TO BE PROVIDED BY APPLICANT AND INSTALLED BY EDISON IN ALL CASES, REFER TO DPS 8258. PROJECT MATERIAL LIST BY ASSEMBLY WITHIN A STATION.)

MI – MEMO INSTALL: SAME AS IN–INSTALL.

MR – MEMO REMOVE: MATERIALS REMOVED BY EDISON.

RM – MEMO REMOVED: MATERIALS REMOVED BY EDISON.

SI – SHOOFLY IN: MATERIALS FURNISHED AND INSTALLED BY EDISON FOR TEMPORARY CONSTRUCTION.

SR – SHOOFLY REMOVE: MATERIALS REMOVED BY EDISON FOR TEMPORARY CONSTRUCTION.

TR – TRANSFER: EDISON LABOR REQUIRED TO TRANSFER EXISTING FACILITIES.

D31: Rev. 11/85

UNDERGROUND SERVICE ALERT
Contact USA
Dial 811 or 800-422-4133
www.digalert.org/contact
For Underground Locating
Two Working Days Before You Dig

D16: Rev. 05/28/20

SOUTHERN CALIFORNIA EDISON
An EDISON INTERNATIONAL Company

N

SCALE: 1" = 60'
0 60 120

PRELIMINARY
Not For Construction

DISTRICT: 44 – SOUTH BAY	PROJ. MGR. WILLIAMS, JENNA J PHONE 3106085194		PLANNER WILLIAMS, JENNA J PHONE 3106085194	DESIGNER: CHIN, ELIZABETH	
PROJECT NO. 2612821	SERVICE REQUEST 3500715	MSR NO.	PRODUCT–1 2111184–RULE 20B–UG INSTALL		ASSOC DESGN
CIRCUIT / VOLTAGE STATLER 16KV		GPS	PRODUCT–2		ASSOC DESGN
SUB / PC NO. WALTERIA SUB		CIRCUIT CODE	PRODUCT–3		ASSOC DESGN
INVENTORY MAP VARIOUS		J.P.A. NO.	PROPOSED CONSTRUCTION (LOCATION) RULE 20B 45 EASTFIELD DR ROLLING HILLS CA 90274		
P 12/29/2023	MUDLA K	J WILLIAMS	E CHIN	16484	
P 11/28/2023	MUDLA K	J WILLIAMS	E CHIN	16484	
TYPE DATE	APPROVED BY	CHECKED BY	DRAWN BY	PAX #	SHEET 2 of 7
Southern California Edison Company					DESIGN\DRWG NO. 1608857_0.01

FILE NAME: I:\608857_0.01.DWG SAVE DATE: 12/20/2023 12:44 PM SAVED BY: KANDLUM

NOTE TO CREW:
WORK WITH RELATED TD2111183 R20B OH REMOVAL

CITY OF ROLLING HILLS

TD2111184 2QQ RULE 20B INSTALL UG

STATLER 16KV % WALTERIA SUB

PULL BOX 3' X 5' PRECAST CONCRETE
SEE UGS HP 225

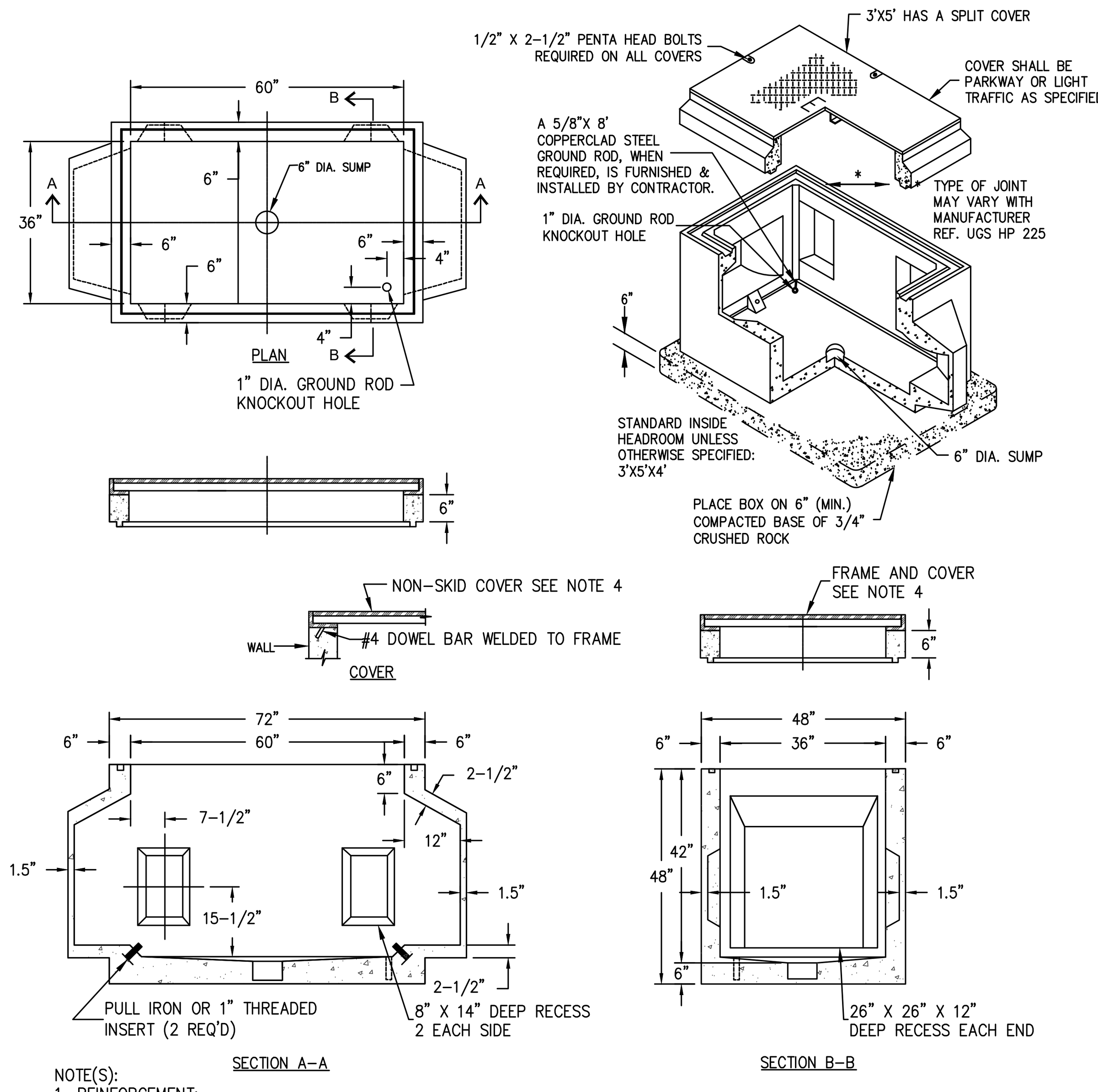

NOTE(S):
1. REINFORCEMENT:
H20-S BRIDGE LOADING.
2. CONCRETE:
CONCRETE SHALL BE CLASS "A" WITH 28-DAY COMPRESSIVE STRENGTH OF 3,000 PSI (MINIMUM). SLIGHT TAPER (3/4" IN DEPTH OF PULL BOX) AND 1" CHAMFER ON ALL INSIDE CORNERS PERMITTED FOR EASE OF FORMING.
3. INSTALLATION:
PULL BOX SHALL BE PLACED ON 6" (MINIMUM) COMPACTED ROCK OR SAND BASE TO ENSURE UNIFORM DISTRIBUTION OF SOIL PRESSURE IN FLOOR. MINIMUM EXCAVATION FOR PULL BOX SHALL BE 52" X 97" X DEPTH TO SUIT JOB.
4. COVERS:
SEE FC 612 AND FC 618 FOR PULL BOX COVERS.
5. GRADE RINGS:
INSTALLING CONTRACTOR SHALL PROVIDE GRADE RINGS (6" MINIMUM) AS NECESSARY IN ORDER TO MAINTAIN COVER OVER CONDUITS PER SCE SPECIFICATIONS OR PERMIT AGENCY SPECIFICATIONS, WHICHEVER IS GREATER.
6. PULL IRONS AND EYES:
SEE AC 729 OR PULL IRONS AND AC 720 FOR PULL EYES.

D53C: Rev. 02/12/21

TYPICAL HANDHOLE INSTALLATION
SEE UGS HP 205

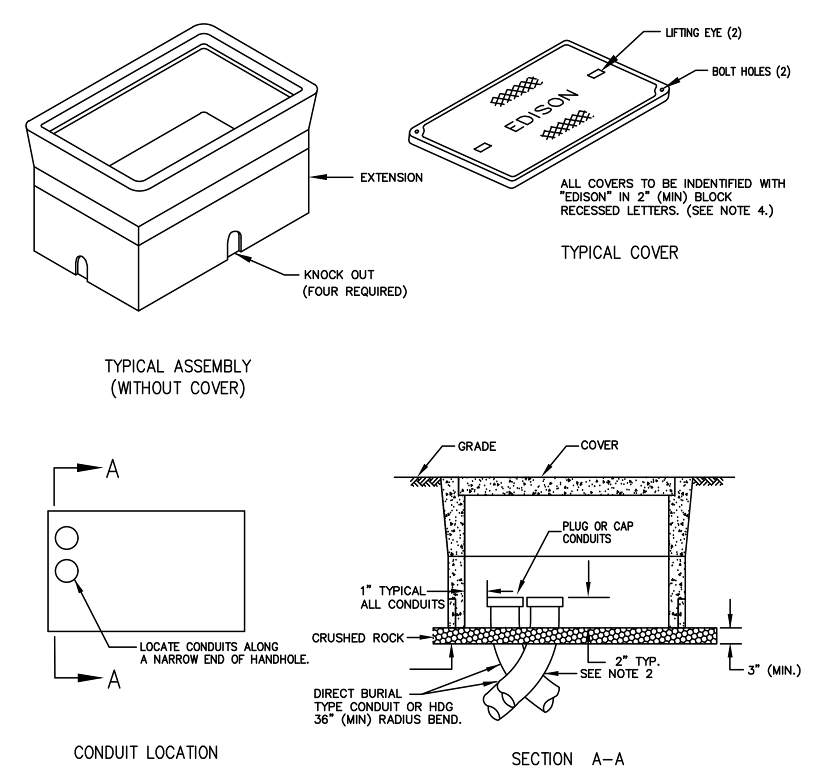

NOTES:
1. SEE UGS HP 200 FOR DIMENSIONS OF VARIOUS SIZE HANDHOLES AVAILABLE.
2. RADIUS ANGLE MAY BE REDUCED TO LESS THAN 90° PROVIDING THE PROJECTED CENTER LINE OF THE CONDUIT CLEARS HANDHOLE OPENING.
3. TWO HOLD DOWN DEVICES TO BE SUPPLIED WITH EACH HANDHOLE.
4. COVER SHALL BE IDENTFIED WITH "EDISON" IN MINIMUM 2-INCH LETTERS OR LABELS PERMANENTLY SECURED TO THE LID.
5. FOR MAINTENANCE ON 10-1/2" X 17" CONCRETE HANDHOLES USE SWINGBOLT WITH SAP 10204721.

D75 REV. 03/18/19

PRECAST CONCRETE PULL BOX WITH DEEP RECESSES
(2'-6" X 4')
SEE UGS HP 220

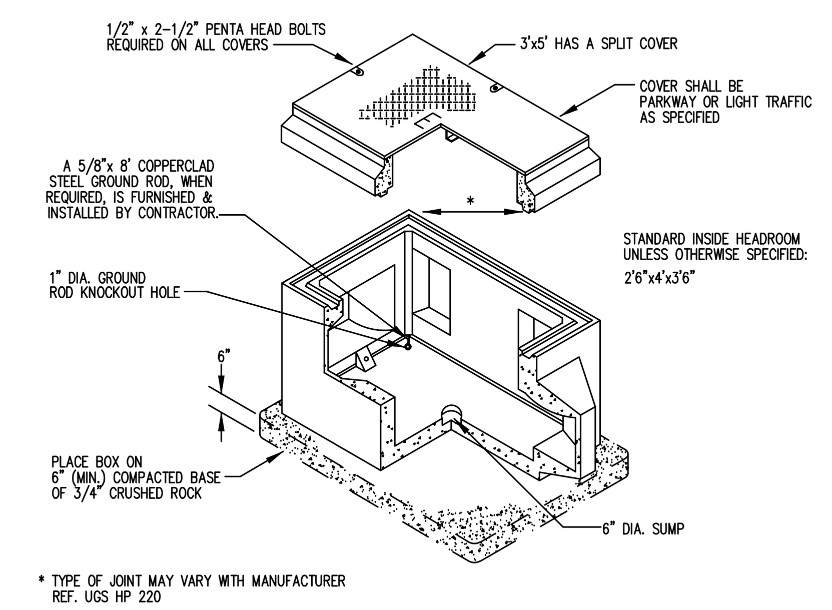

* TYPE OF JOINT MAY VARY WITH MANUFACTURER REF. UGS HP 220

NOTE(S):
1. REINFORCEMENT:
H20-S BRIDGE LOADING.
2. CONCRETE:
CONCRETE SHALL BE CLASS "A" WITH 28-DAY COMPRESSIVE STRENGTH OF 3,000 PSI (MINIMUM). SLIGHT TAPER (3/4" IN DEPTH OF PULL BOX) AND 1" CHAMFER ON ALL INSIDE CORNERS PERMITTED FOR EASE OF FORMING.
3. INSTALLATION:
PULL BOX SHALL BE PLACED ON 6" (MINIMUM) COMPACTED ROCK OR SAND BASE TO INSURE UNIFORM DISTRIBUTION OF SOIL PRESSURE IN FLOOR. MINIMUM EXCAVATION FOR PULL BOX SHALL BE 46" X 83" X DEPTH TO SUIT JOB.
4. COVERS:
SEE FC 606 AND FC 618 FOR PULL BOX COVERS.
5. GRADE RINGS:
INSTALLING CONTRACTOR SHALL PROVIDE GRADE RINGS (6" MINIMUM) AS NECESSARY IN ORDER TO MAINTAIN COVER OVER CONDUITS PER SCE SPECIFICATIONS OR PERMIT AGENCY SPECIFICATIONS, WHICHEVER IS GREATER.
6. PULL IRONS AND EYES:
SEE AC 729 FOR PULL IRONS AND AC 720 FOR PULL EYES.
7. SEE FC 618.
8. SEE FC 606.

D53B: Rev. 10/26/20

PULL BOX 4' X 6'-6" PRECAST CONCRETE
SEE UGS HP 228

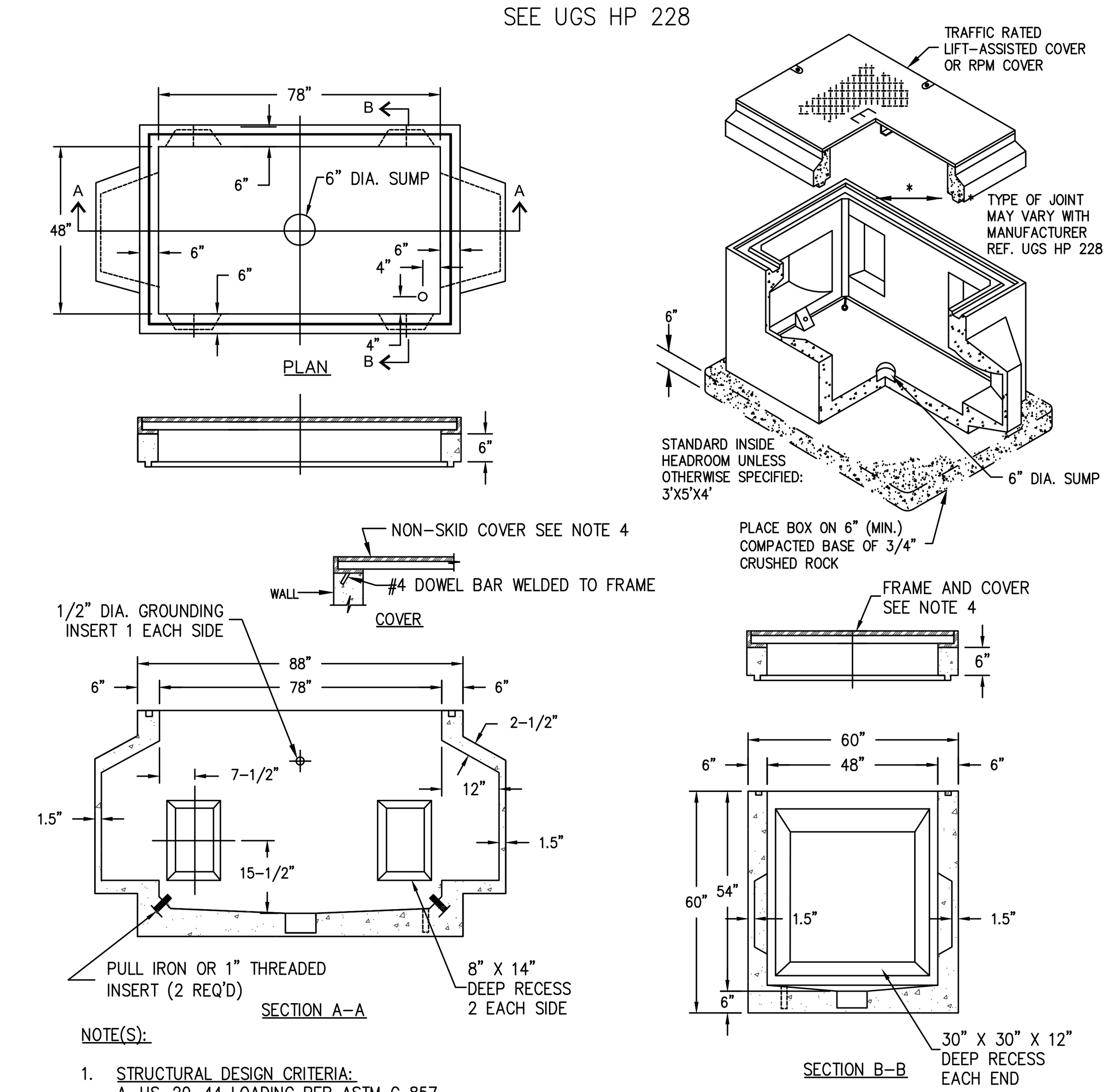

NOTE(S):
1. STRUCTURAL DESIGN CRITERIA:
A. HS-20-44 LOADING PER ASTM C 857
B. LIFT ASSIST STEEL COVER DESIGN SHALL MEET ASTM C1802 LOAD LEVEL 6 (FULL TRAFFIC).
2. CONCRETE:
CONCRETE SHALL BE CLASS "A" WITH 28-DAY MINIMUM COMPRESSIVE STRENGTH OF 3,000 PSI. SLIGHT TAPER (3/4" IN DEPTH OF PULL BOX) AND 1" CHAMFER OF ALL INSIDE CORNERS PERMITTED FOR EASE OF FORMING.
3. INSTALLATION:
PULL BOX SHALL BE PLACED ON MINIMUM OF 6" COMPACTED ROCK OR SAND BASE TO ENSURE UNIFORM DISTRIBUTION OF SOIL PRESSURE IN FLOOR. MINIMUM EXCAVATION FOR PULL BOX SHALL BE 84" X 114" X DEPTH TO SUIT THE JOB.
4. COVERS:
SEE FC 616 FOR PULL BOX COVER. RPM COVER SHALL BE AVAILABLE AS AN OPTION. MINIMUM COVER COEFFICIENT OF FRICTION (COF) OF 0.70.
5. GRADE RINGS:
INSTALLING CONTRACTOR SHALL PROVIDE GRADE RINGS (6" MINIMUM) AS NECESSARY IN ORDER TO MAINTAIN COVER OVER CONDUITS PER SCE SPECIFICATIONS OR PERMIT AGENCY SPECIFICATIONS, WHICHEVER IS GREATER.
6. PULL IRONS AND EYES:
SEE AC 729 FOR PULL IRONS AND AC 720 FOR PULL EYES.

D139: REV. 02/12/21

36" X 60" LIFT ASSIST STEEL PULL BOX COVER - FULL TRAFFIC
SEE UGS FC 615

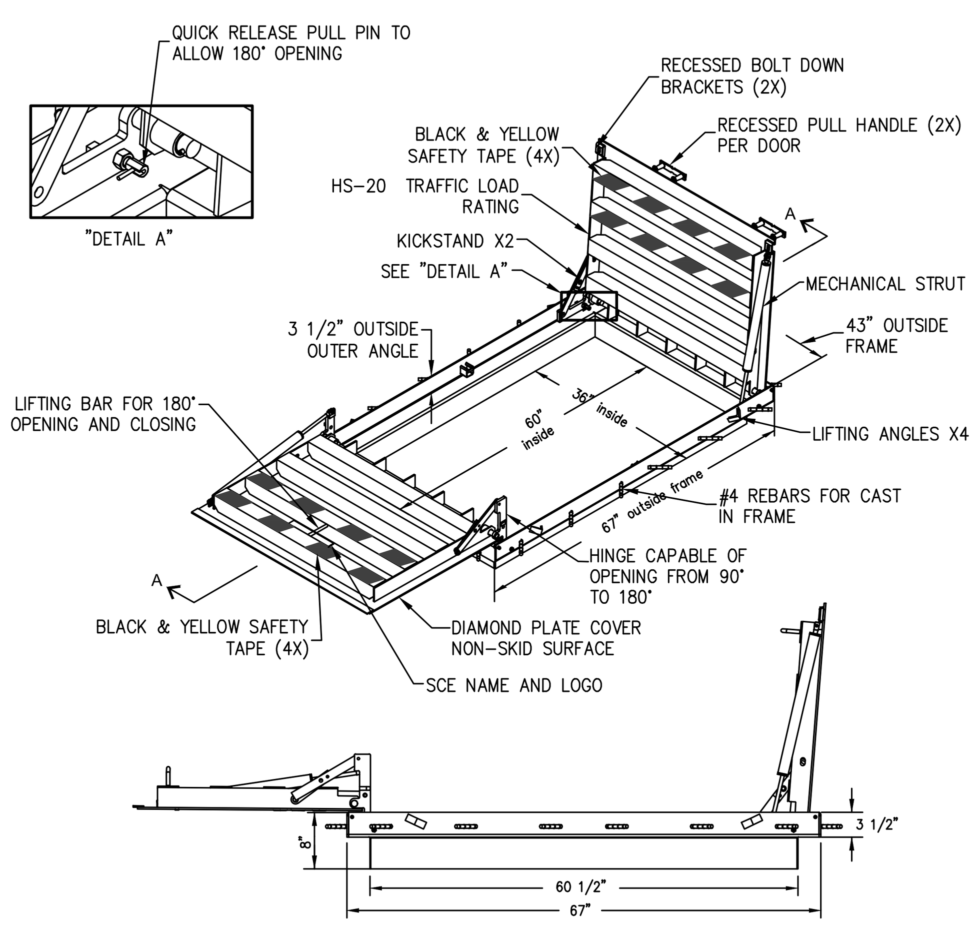

COVER NOTES:
1. COVERS TO BE USED WITH FRAME, CLEARANCE BETWEEN COVER AND FRAME SHALL BE 3/16" ALL AROUND.
2. FOUR (4) 1/2-13 NC X 1-1/2 PENTA HEAD STAINLESS STEEL BOLTS PER COVER.
3. STEEL COVER PLATE SHALL BE ASTM A-36 MANUFACTURED WITH 1/4" THICK PLATE.
4. COVER IS TO BE HOT-DIP GALVANIZED AFTER FABRICATION.
5. ALL MANUFACTURER'S COVER TO BE INTERCHANGEABLE.

FRAME NOTES:
1. STEEL FRAMES SHALL BE ASTM A-36.
2. FRAMES SHALL BE HOT-DIP GALVANIZED AFTER FABRICATION.

DESIGN CRITERIA:
1. ALL FRAMES AND SHAPES SHALL BE ASTM A-36.
2. HS-20 LOAD CONDITION PER AASHTO AND ASTM C857.
3. ASTM C 1802-18B, LOAD LEVEL 6.
4. LOAD IMPACT: 30% MINIMUM.
5. AWS ER70-6 CO GAS SHIELDING WIRE.

D140: Rev. 02/12/21

POLE RISER BEND STANDARD LOCATION
SEE UGS CD 160

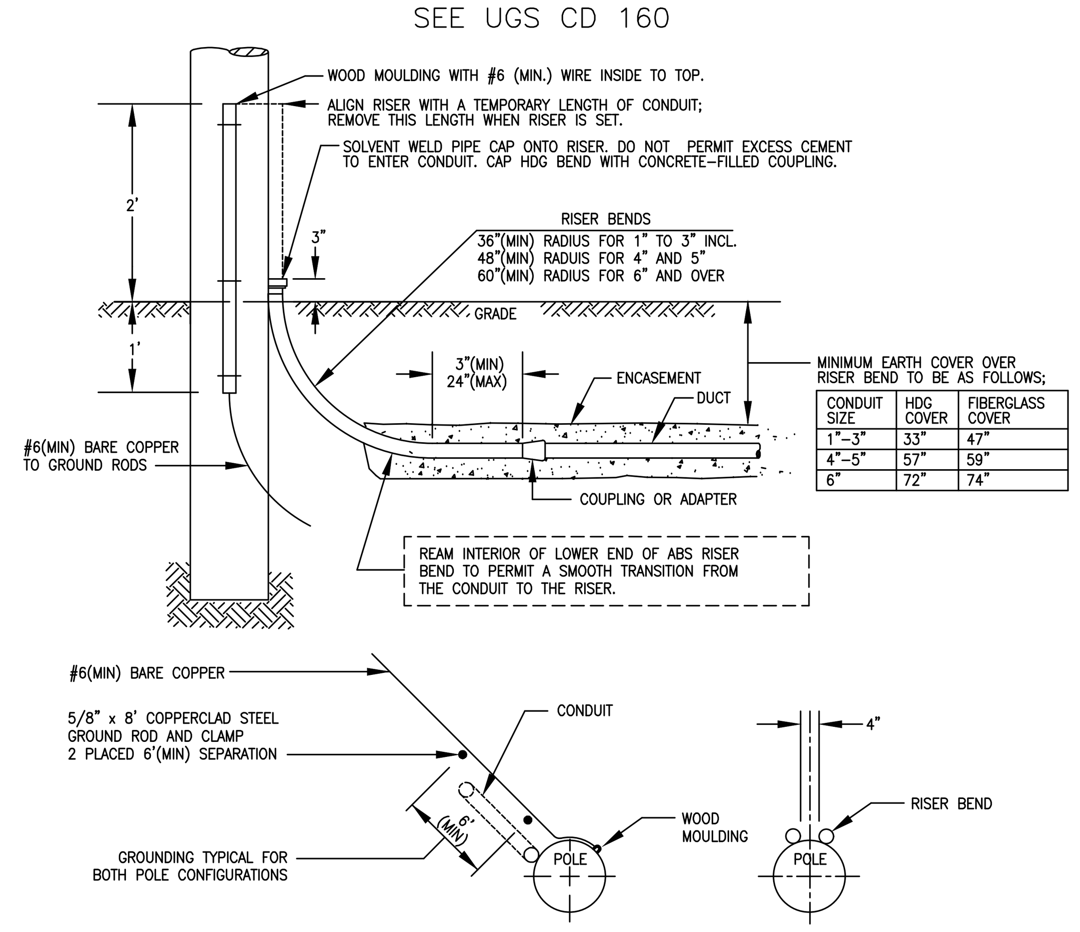

CONDUIT SIZE	HDG COVER	FIBERGLASS COVER
1"-3"	33"	47"
4"-5"	57"	59"
6"	72"	74"

1. APPROVED RISER BENDS ARE SHOWN ON FOLLOWING TABLE;

MATERIAL	1"	1-1/2"	2"	2-1/2"	3"	4"	5"	6"
ABS	–	–	–	–	X	X	X	–
FIBERGLASS	–	–	–	–	X	X	X	X
HDG	X	X	X	X	X	X	X	X

NOTE: 6" HDG OR FIBERGLASS RISER BEND SHALL BE USED WHEN SPECIFIED ON THE WORKING DRAWING. SEE UGS AC 702 FOR GROUNDING HDG RISER BENDS.

2. THE TOP AND BOTTOM OF 3", 4", 5" OR 6" FIBERGLASS BENDS ARE FURNISHED WITH PERMANENTLY ATTACHED PVC COUPLINGS. ALSO INCLUDED IS A 6" LONG 3", 4", 5" OR 6" SCHEDULE 80 PVC STUB-OUT, SOLVENT WELDED INTO THE TOP COUPLING. SEE UGS CD 166 FOR FIBERGLASS RISER BEND MATERIAL INFORMATON AND SUPPLIERS.
3. TWO GROUND RODS ARE REQUIRED AT ALL PRIMARY RISER POLES. DRIVE RODS IN TRENCH BOTTOM WITH 6' MINIMUM SEPARATION IN UNDISTURBED EARTH. LEAVE THE ROD TOPS 3" ABOVE THE TRENCH BOTTOM AND ATTACH CONTINUOUS GROUND WIRE WITH CLAMPS. EXTEND WIRE TO INDICATED LOCATION ON POLE AND STUB UP 2' ABOVE GRADE IN WOOD MOULDING. ALL GROUNDING MATERIALS FURNISHED BY CONTRACTORS. SEE UGS AC 703 FOR APPROVED GROUNDING MATERIALS.
4. ENCASEMENT REQUIRED ONLY WHEN CALLED OUT ON WORKING DRAWING.
5. PVC RISERS MAY BE SUBSTITUTED FOR FIBERGLASS FOR STRAIGHT RUNS OF 150' OR LESS IN CONDUIT SIZES 4" AND UNDER.

D78: REV. 02/14/11

RISER INSTALLATION USING UNISTRUT
SEE DUG CR 110.2

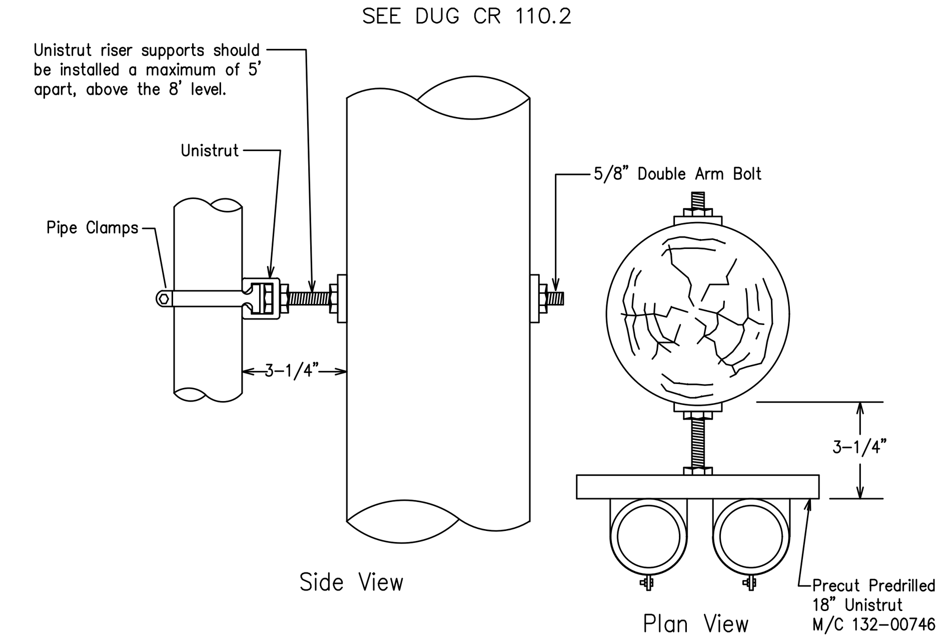

CONVENTIONAL RISER INSTALLATION
NOT TO SCALE

NOTE(S):
1. All notes pertaining to Figure CR 110-1.1 (Sheet 1) construction on scope CR 110.1 also apply to risers supported by a unistrut.
1.0 APPLICATION
The unistrut shown in Figure CR 110-5 (Sheet 3) is the preferred method where multiple risers are required.
2.0 MATERIAL

TABLE CR 110-2: Unistrut Pipe Clamps

Conduit Size (in)	Material Code
1	622-04052
2	133-48248
2.5	133-48214
3	133-00025
4	133-00017
5	133-48008
6	132-00746

REF.: DUG CR 110.2
D38: REV. 02/18/11

SOUTHERN CALIFORNIA EDISON
An EDISON INTERNATIONAL Company

SCALE: 1" = 60'
0 60 120

PRELIMINARY
Not For Construction

DISTRICT 44 - SOUTH BAY		PROJ. MGR. WILLIAMS, JENNA J PHONE 3106085194		PLANNER WILLIAMS, JENNA J PHONE 3106085194	DESIGNER CHIN, ELIZABETH	
PROJECT NO. 2612821	SERVICE REQUEST 3500715	MSR NO.	PRODUCT-1 2111184-RULE 20B-UG INSTALL			ASSOC DESGN
CIRCUIT / VOLTAGE STATLER 16KV		GPS	PRODUCT-2			ASSOC DESGN
SUB / PG NO. WALTERIA SUB		CIRCUIT CODE	PRODUCT-3			ASSOC DESGN
INVENTORY MAP VARIOUS		J.P.A. NO.		PROPOSED CONSTRUCTION (LOCATION) RULE 20B 45 EASTFIELD DR ROLLING HILLS CA 90274		

TYPE	DATE	APPROVED BY	CHECKED BY	DRAWN BY	PAX #
P	12/29/2023	MUDILA K	J WILLIAMS	E CHIN	16484
P	11/28/2023	MUDILA K	J WILLIAMS	E CHIN	16484

SHEET 3 OF 7
DESIGN\DRWG NO. 1608857_0.01
Southern California Edison Company

FILE NAME:1608857_0.01.DWG SAVE DATE:12/30/2023 12:44 PM SAVED BY:KANGULM

EXISTING SINGLE LINE
STATLER 16KV % WALTERIA SUB

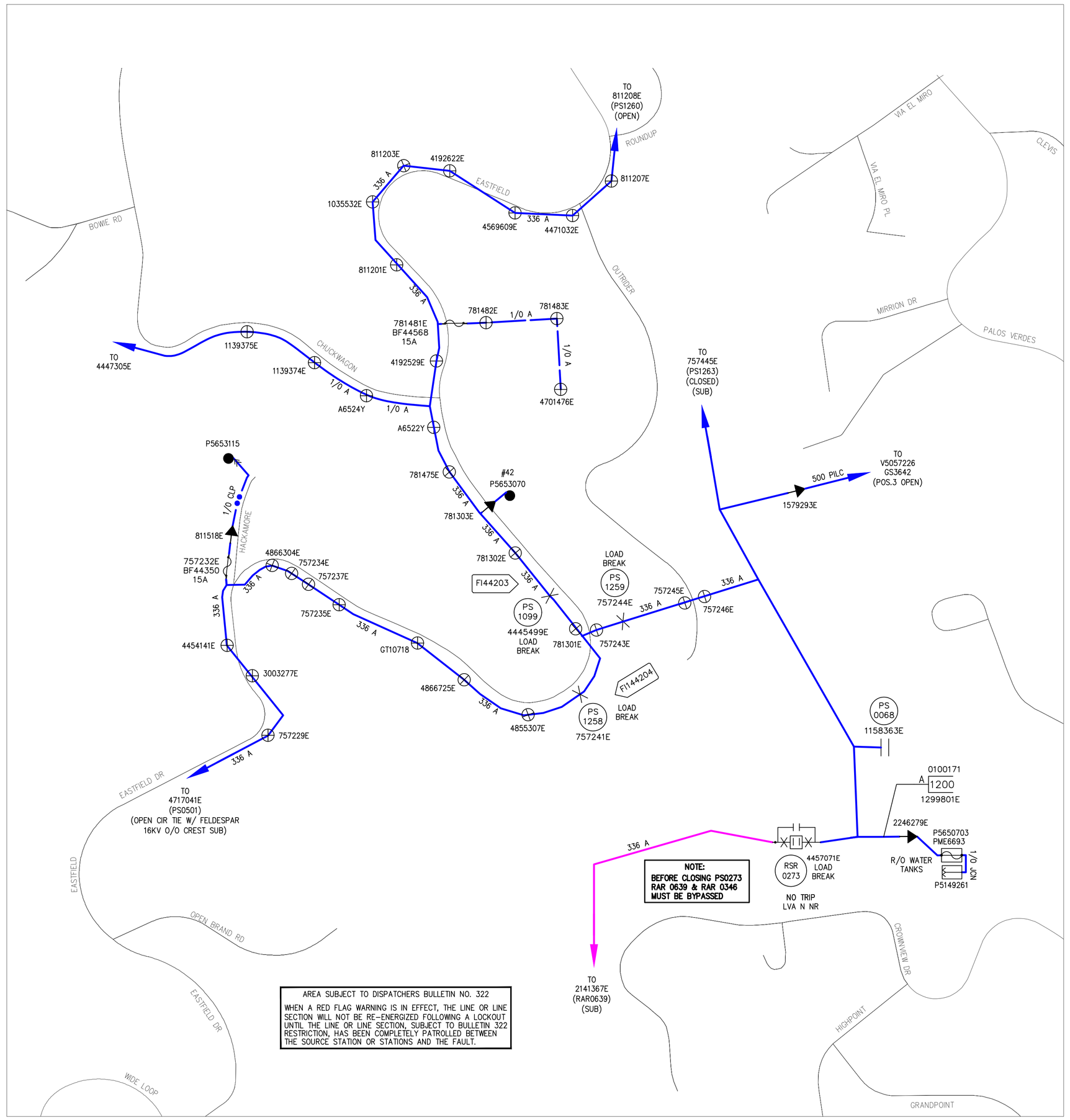

PROPOSED SINGLE LINE
STATLER 16KV % WALTERIA SUB

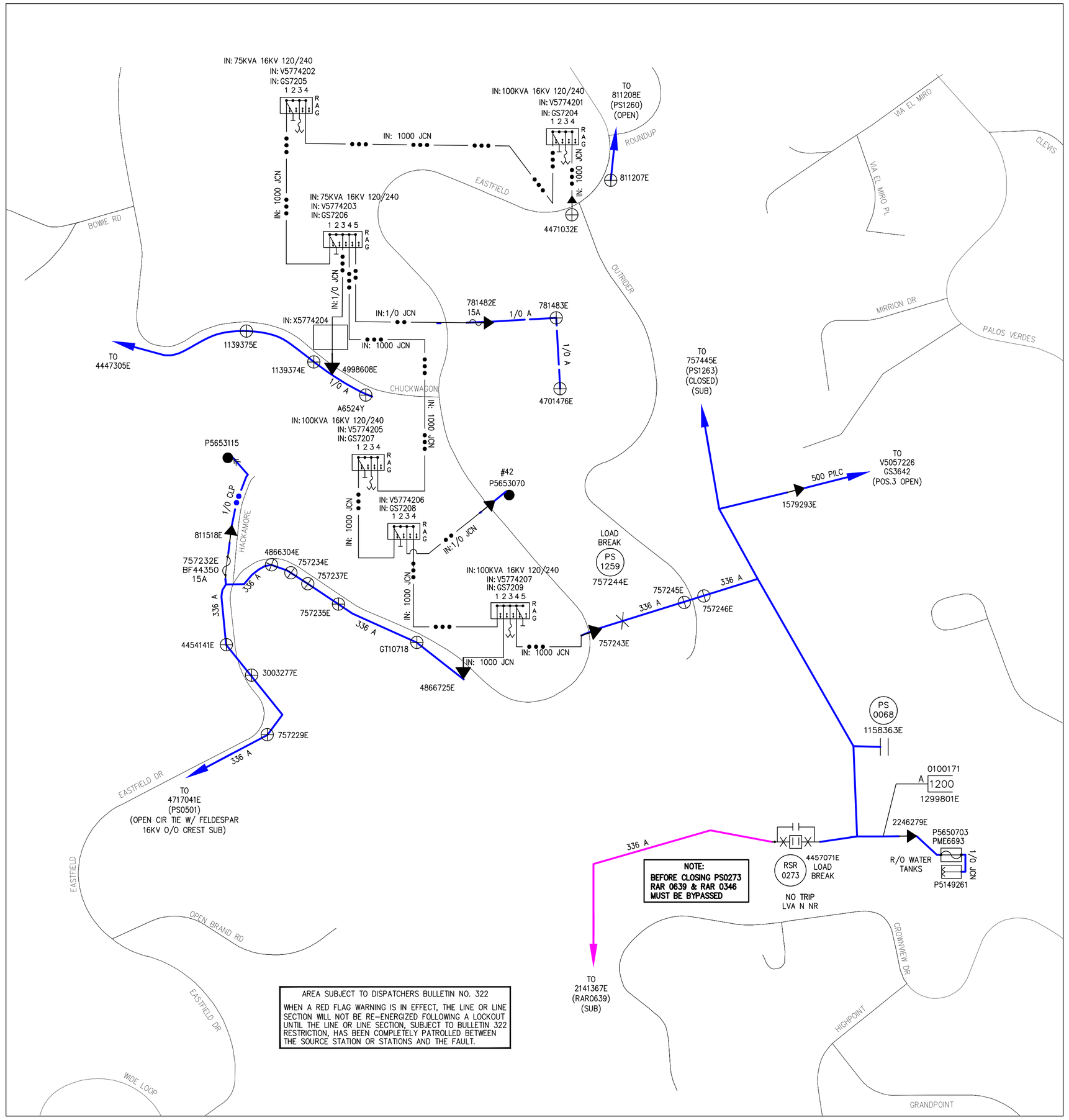

DISTRICT: 44 — SOUTH BAY	PROJ. MGR.: WILLIAMS, JENNA J PHONE 3106085194	PLANNER: WILLIAMS, JENNA J PHONE 3106085194	DESIGNER: CHIN, ELIZABETH		
PROJECT NO.: 2612821	SERVICE REQUEST: 3500715	MSR NO.	PRODUCT-1: 2111184—RULE 20B-UG INSTALL		ASSOC DESGN
CIRCUIT / VOLTAGE: STATLER 16KV		GPS	PRODUCT-2		ASSOC DESGN
SUB / PG NO.: WALTERIA SUB		CIRCUIT CODE	PRODUCT-3		ASSOC DESGN
INVENTORY MAP: VARIOUS		J.P.A. NO.	PROPOSED CONSTRUCTION (LOCATION): RULE 20B 45 EASTFIELD DR ROLLING HILLS CA 90274		
P 12/29/2023	MUDLA K	J WILLIAMS	E CHIN	16484	
P 11/28/2023	MUDLA K	J WILLIAMS	E CHIN	16484	
TYPE / DATE	APPROVED BY	CHECKED BY	DRAWN BY	PAX #	SHEET: 4 OF 7
Southern California Edison Company					DESIGN\DRWG NO.: 1608857_0.01

FILE NAME: W2885_2.DWG SAVE DATE: 12/20/2023 12:44 PM SAVED BY: KANGULM

NOTE TO CREW:
WORK WITH RELATED TD2111183 R20B OH REMOVAL
CITY OF ROLLING HILLS
TD2111184 2QQ RULE 20B INSTALL UG
STATLER 16KV % WALTERIA SUB
V5774201
VD=1.1 FL=2.58 200 PANEL 120/240V 1P 17.1KW 5TONS 21 EASTFIELD DR ROLLING HILLS ,CA 90274
VD=3.5 FL=4.03 200 PANEL 120/240V 1P 30.5KW 5TONS 23 EASTFIELD DR ROLLING HILLS,CA 90274
VD=3.01 FL=4.96 200 PANEL 120/240V 1P 12.4KW 5TONS 25 EASTFIELD DR ROLLING HILLS ,CA 90274
VD=2.98 FL=4.56 200 PANEL 120/240V 1P 14.9KW 5TONS 27 EASTFIELD DR ROLLING HILLS,CA 90274
VD=1.95 FL=4.54 200 PANEL 120/240V 1P 12.9KW 4TONS 2 OUTRIDER RD ROLLING HILLS,CA 90274
V5774202
VD=0.97 FL=4.63 200 PANEL 120/240V 1P 7.6KW 5TONS 24 EASTFIELD DR ROLLING HILLS,CA 90274
VD=0.38 FL=3.22 200 PANEL 120/240V 1P 2.3KW 2TONS 29 EASTFIELD DR ROLLING HILLS ,CA 90274
VD=0.56 FL=2.63 200 PANEL 120/240V 1P 7.6KW 5TONS 31 EASTFIELD DR ROLLING HILLS ,CA 90274
VD=1.44 FL=4.35 200 PANEL 120/240V 1P 11.6KW 5TONS 33 EASTFIELD DR ROLLING HILLS,CA 90274
T.L.M. DATA: 5774201
SIZE KVA CUST % LOAD
EXIST. 0 0 0 0%
PROP. 100 97.5 5 97.5%
VOLTAGE DROP: SEE MAP
FLICKER FACTOR: SEE MAP
PRI. CIRCUIT: STATLER 16KV
D27: REV. 12/10/21
LINE DEVICE ID# GS7204
TO BE PROVIDED BY DISTRICT AT THE TIME OF INSTALL
D19: Rev. 10/26/20
TD2111184
CI: V5774201 VAULT 4
7'x18'x8' TUB STYLE
VENTS REQUIRED
TD2111184
EX: 811203E ELEVATED POLE 6
50' CLASS H4
EX: 25KVA 16KV 120/240
RM: 1 - TM 2-1/0 & 1-#2 600V 1P UG TO OH
RM: 1 - RSR PRECUT UNISTRUT W/ HARDWARE NO PVC
RM: 1 - RSR PVC/STRAP 3" TO 2" UNISTRUT APP
RM: 7' - CM DUCT 2" AND UP
RM: 177' - CBL 2-1/0 1-2 AL 3-1/C 600V CLP PLEX (1203E TO PNL@25)
TD2111184
EX: 4192622E ELEVATED POLE 5
45' CLASS 4
EX:25KVA 16KV 120/240
RM: 1 - TM 2-1/0 & 1-#2 600V 1P UG TO OH
RM: 1 - RSR 3" TO 2" EXTENSION
RM: 8' - CM DUCT 2" AND UP (2622E TO P/U PT B)
RM: 118' - CBL 2-1/0 1-2 AL 3-1/C 600V CLP PLEX (2622E TO PNL@23)
TD2111184
EX: 4569609E ELEVATED POLE 3
45' CLASS 4
RM: 1 - TM 2-1/0 & 1-#2 600V 1P UG TO OH
RM: 1 - RSR 3" TO 2" EXTENSION
RM: 45' - CM DUCT 2" AND UP (9609E TO P/U PT A)
RM: 90' - CBL 2-1/0 1-2 AL 3-1/C 600V CLP PLEX (9609E TO P/U PT A)
TD2111184
IN: 4471032E ELEVATED POLE 2
55' CLASS 3
IN: 1 - POLE 55' CL 3 WD FT /W PROT BARR WF
IN: 1 - RSR PRECUT UNISTRUT W/ HARDWARE NO PVC
IN: 1 - SEC ROLLER (166-CLEVIS & SPOOL)
IN: 1 - TM 2-700 & 1-350 600V 1P UG TO OH
IN: 1 - XA DBL HD DE COMP 10'
IN: 1 - PH CS 10' XA 16KV 3P 3-1000
IN: 1 - SA HFA POLY NON XFMR 16KV
IN: 2 - SA HFA POLY 16KV
IN: 1 - RSR PVC/STRAP 5" UNISTRUT APP
CF: 1204' - CM DUCT 5" (1032E TO V4201)
CF: 301' - CM DUCT FOR EXCAVATION (1032E TO V4201)
IN: 1035' - CBL 1000 AL 1-1/C 17KV CLP PJ (1032E TO V4201)
MI: 207' - CBL 1000 AL 1-1/C 17KV CLP PJ
IN: 3 - INS POLY DE 16KV HOT SHOE 336 ACSR
IN: 1 - RSR PVC/STRAP 3" UNISTRUT APP
IN: 145' - CD 1/0 STR AL TRIPLEX W/ACSR NEUTRAL
IN: 2 - AG DOWN GUY 3/8" - 50' LESS THAN 22.5KV
IN: 1 - AG DOWN GUY 7/16" - 50' LESS THAN 22.5KV
IN: 1 - AG DOWN GUY 9/32" - 50' LESS THAN 22.5KV
IN: 2 - AG SCREW ANCHOR 10" DOUBLE HELIX
TD2111184
RM: 4471032E ELEVATED POLE 1
45' CLASS 2
RM: 1 - POLE 45' CLASS 2 WOOD FULL TREAT
RM: 1 - XA DBLE VB 10' STEEL PINS
RM: 1 - XA SNGL FB 10' STEEL PINS
RM: 1 - TR OH 25KVA 16KV 120/240 1P
SN:
RM: 2 - FE FH SMD20 17" 200A 16KV 1-EA
RM: 1 - GR OH #6 SOL WP SECONDARY W/ROD
RM: 735' - CD 336 STR AL BARE ACSR NON-GREASED
RM: 6 - INS POLY DE 16KV HOT SHOE 336 ACSR
RM: 3 - INS POLY W/PIN 16KV CLMP #4-653 ACSR
RM: 1 - SEC ROLLER (166-CLEVIS & SPOOL)
RM: 145' - CD 1/0 STR AL TRIPLEX W/ACSR NEUTRAL
RM: 1 - AG DOWN GUY 3/8" - 50' LESS THAN 22.5KV
RM: 1 - AG DOWN GUY 9/32" - 50' LESS THAN 22.5KV
RM: 1 - AG ANCHOR ROD 3/4" X 8' 2-EYE W/PLATE
LINE DEVICE ID# GS7205
TO BE PROVIDED BY DISTRICT AT THE TIME OF INSTALL
D19: Rev. 10/26/20
T.L.M. DATA: 5774202
SIZE KVA CUST % LOAD
EXIST. 0 0 0 0%
PROP. 75 32.2 4 64.4%
VOLTAGE DROP: SEE MAP
FLICKER FACTOR: SEE MAP
PRI. CIRCUIT: STATLER 16KV
D27: REV. 12/10/21
TD2111184
CI: V5774202 VAULT 7
7'x18'x8' TUB STYLE
VENTS REQUIRED
CI: 1 - S V 7'X18'X8' TUB 2 PIECE
CF: 1 - SS TAX EXCV CST FOR VLT
IN: 2 - JJ 3-DBE 1000 600A
IN: 2 - JJ DBE 1/0 200A W/BUSH EXT 1/0 600A
IN: 4 - JJ DE DB RCPT INS W/TST PNT 600A
IN: 1 - SL CBL RACK STL 30" FOR VLT/MH
IN: 1 - SW UG SF6 LB RAG 4-WY 600A 17.5KV
LINE DEVICE ID:
IN: 1 - TR UG BT MC F DE 75KVA 16KV 120/240 1P+
SN:
CF: 1604' - CM DUCT 5" (V4202 TO V4203)
CF: 401' - CM DUCT FOR EXCAVATION (V4202 TO V4203)
IN: 1203' - CBL 1000 AL 1-1/C 17KV CLP PJ (V4202 TO V4203)
MI: 240' - CBL 1000 AL 1-1/C 17KV CLP PJ
CI: 1 - S HH POLY 17"X30"X18" LT TRAFFIC (H202A)
CF: 1 - SS TAX EXCV CST FOR PLASTIC HH (H202A)
IN: 1 - CNN BAR INS LT DUTY #8-350 1P 6-WAY (H202A)
IN: 1 - CNN BAR INS LT DUTY #8-350 1P 6-WAY (H202B)
IN: 1 - CNN BAR INS LT DUTY #8-350 1P 6-WAY (H202C)
CF: 137' - CM DUCT 2 1/2" TO 4" (V4202 TO H202B)
CF: 285' - CM DUCT 2 1/2" TO 4" (V4202 TO H202C)
CF: 106' - CM DUCT 2 1/2" TO 4" (V4202 TO H202A)
CF: 33' - CM DUCT FOR EXCAVATION (V4202 TO H202B)
CF: 16' - CM DUCT FOR EXCAVATION (V4202 TO H202C)
CF: 16' - CM DUCT FOR EXCAVATION (V4202 TO H202A)
IN: 106' - CBL (2) 350 MCM, (1) 4/0 600V CLP PLEX (V4202 TO H202A)
MI: 106' - CBL (2) 350 MCM, (1) 4/0 600V CLP PLEX
IN: 137' - CBL (2) 350 MCM, (1) 4/0 600V CLP PLEX (V4202 TO H202B)
IN: 285' - CBL (2) 350 MCM, (1) 4/0 600V CLP PLEX (V4202 TO H202C)
CF: 25' - CM DUCT 2 1/2" TO 4" (H202A TO P/L@29)
CF: 15' - CM DUCT 2 1/2" TO 4" (H202A TO P/L@31)
CF: 25' - CM DUCT FOR EXCAVATION (H202A TO P/L@29)
CF: 15' - CM DUCT FOR EXCAVATION (H202A TO P/L@31)
IN: 69' - CBL 2-1/0 1-2 AL 3-1/C 600V CLP PLEX (H202A TO PNL@29)
MI: 24' - CBL 2-1/0 1-2 AL 3-1/C 600V CLP PLEX
IN: 52' - CBL 2-1/0 1-2 AL 3-1/C 600V CLP PLEX (H202A TO PNL@31)
TD2111184
EX: 811201E ELEVATED POLE 8
45' CLASS 4
EX: 25KVA 16KV 120/240
RM: 1 - TM 2-350 & 1-4/0 600V 1P UG TO OH
RM: 1 - CNN BAR INS LT DUTY #8-350 1P 6-WAY (H202B)
RM: 1 - RSR 3" TO 2" EXTENSION
RM: 6' - CM DUCT 2" AND UP (1201E TO H202B)
RM: 36' - CBL (2) 350 MCM, (1) 4/0 600V CLP PLEX (1201E TO H202B)
CI: H201C HH 17"x30"x18" FRP IN:1-6W BAR 1P
CI: H201B HH 17"x30"x18" FRP IN:1-6W BAR 1P
CI: H201A HH 17"x30"x18" FRP IN:1-6W BAR 1P
CI: H202A HH 17"x30"x18" FRP IN:1-6W BAR 1P
EX:H202B HH 17"x30"x18" FRP RM:1-6W BAR 1P IN:1-6W BAR 1P
EX:H202C HH 17"x30"x18" FRP RM:1-6W BAR 1P IN:1-6W BAR 1P
CF 4 5" 10 599' V4201 TO V4202 IN: 599' 3-1000 JCN 16KV TENSION 3-1000 JCN 5" DUCT V4201 TO V4202 - 6115 LBS V4202 TO V4201 - 3567 LBS
CF 1 3" 8 11' H201C TO P/U PT C IN: 151' 4/0 1P TENSION 4/0 1P 3" DUCT H201C TO PNL - 41 LBS
CF 1 3" 6 11' H201B TO P/U PT B IN: 92' 1/0 1P TENSION 1/0 1P 3" DUCT H201B TO PNL - 23 LBS
CF 1 3" 4 12' H201A TO P/U PT A IN: 64' 1/0 1P TENSION 1/0 1P 3" DUCT H201A TO PNL - 15 LBS
CF 1 3" 12 25' H202A TO P/L IN: 69' 1/0 1P TENSION 1/0 1P 3" DUCT H202A TO PNL - 23 LBS
CF 1 3" 9 12' H201C TO P/L IN: 64' 1/0 1P TENSION 1/0 1P 3" DUCT H201C TO PNL - 10 LBS
CF 1 3" 7 328' V4201 TO H201C IN: 328' 350 1P TENSION 350 1P 3" DUCT V4201 TO H201C - 649 LBS(OVERMAX) H201C TO V4201 - 164 LBS
CF 1 3" 11 106' V4202 TO H202A IN: 106' 350 1P TENSION 350 1P 3" DUCT V4202 TO H202A - 175 LBS H202A TO V4202 - 55 LBS
CF 1 3" 13 15' H202A TO P/L IN: 52' 1/0 1P TENSION 1/0 1P 3" DUCT H202A TO PNL - 13 LBS
CF 4 5" 14 401' V4202 TO V4203 IN: 401' 3-1000 JCN 16KV TENSION 3-1000 JCN 5" DUCT V4202 TO V4203 - 2102 LBS V4203 TO V4202 - 1811 LBS
CF 1 3" 16 285' V4202 TO H202C IN: 285' 350 1P TENSION 350 1P 3" DUCT V4202 TO H202C - 577 LBS H202C TO V4202 - 138 LBS
CF 1 3" 15 137' V4202 TO H202B IN: 137' 350 1P TENSION 350 1P 3" DUCT V4202 TO H202B - 314 LBS H202B TO V4202 - 66 LBS
CF 1 3" 5 186' V4201 TO H201B IN: 186' 350 1P TENSION 350 1P 3" DUCT V4201 TO H201B - 344 LBS H201B TO V4201 - 92 LBS
CF 1 3" 3 70' V4201 TO H201A IN: 70' 350 1P TENSION 350 1P 3" DUCT V4201 TO H201A - 128 LBS H201A TO V4201 - 31 LBS
CF 4 5" 1 301' V4201 TO 1032E IN: 345' 3-1000 JCN 16KV TENSION 3-1000 JCN 5" DUCT V4201 TO 1032E - 9984 LBS 1032E TO V4201 - 1448 LBS
CF 1 5" 2 301' V4201 TO 1032E IN: 331' 700 1P TENSION 700 1P 5" DUCT V4201 TO 1032E - 893 LBS 1032E TO V4201 - 259 LBS
ABND: 1-3" (7') 1203E TO P/U PT C RM: 177' 1/0 1P
ABND: 1-3" (8') 2622E TO P/U PT B RM: 118' 1/0 1P
ABND: 1-3" (45') 9609E TO P/U PT A RM: 90' 1/0 1P
ABND: 1-3" (6') 1201E TO H202B RM: 36' 350 1P
EX: 1-3" (140') P/U PT C TO PNL
EX: 1-3" (81') P/U PT B TO PNL
EX: 1-3" (52') P/U PT A TO PNL
EX: 1-3" (128') H202B TO PNL EX: 128' 1/0 1P
EX: 1-3" (71') H202C TO PNL
CO: 1-3" (52') P/L TO PNL
CO: 1-3" (44') P/L TO PNL
CO: 1-3" (37') P/L TO PNL
IN: 10"DBL HELIX@30' IN: 9/32" DG IN: 3/8" DG
IN: 10"DBL HELIX@30' IN: 7/16" DG IN: 3/8" DG
IN: 145' 1/0AT RM: 145' 1/0AT
EASTFIELD DR. (PRIVATE RD.)
OUTRIDER RD
19 EASTFIELD DR
21 EASTFIELD DR
23 EASTFIELD DR
25 EASTFIELD DR
27 EASTFIELD DR
29 EASTFIELD DR
31 EASTFIELD DR
33 EASTFIELD DR
24 EASTFIELD DR
26 EASTFIELD DR
22 EASTFIELD DR
16 EASTFIELD DR
18 EASTFIELD DR
2 OUTRIDER RD
3 CHUCKWAGON RD
EX:336A-16KV
EX:811207E
MATCH LINE STA. 47+54 SEE SHEET 2
MATCH LINE STA. 77+87 SEE SHEET 2
PRELIMINARY
Not For Construction
SOUTHERN CALIFORNIA EDISON An EDISON INTERNATIONAL Company
SCALE: 1" = 60'
DISTRICT 44 - SOUTH BAY
PROJ. MGR. PHONE WILLIAMS, JENNA J 3106085194
PLANNER PHONE WILLIAMS, JENNA J 3106085194
DESIGNER CHIN, ELIZABETH
PROJECT NO. 2612821
SERVICE REQUEST 3500715
PRODUCT-1 2111184-RULE 20B-UG INSTALL
CIRCUIT / VOLTAGE STATLER 16KV
SUB / PG NO. WALTERIA SUB
INVENTORY MAP VARIOUS
PROPOSED CONSTRUCTION (LOCATION) RULE 20B 45 EASTFIELD DR ROLLING HILLS CA 90274
P 12/29/2023 MUDILA K J WILLIAMS E CHIN 16484
P 11/28/2023 MUDILA K J WILLIAMS E CHIN 16484
TYPE DATE APPROVED BY CHECKED BY DRAWN BY PAX #
SHEET 5 OF 7
DESIGN\DRWG NO. 1608857_0.01
Southern California Edison Company
FILE NAME:1608857_0.01.DWG SAVE DATE:12/30/2023 12:44 PM SAVED BY:KANGULM

CITY OF ROLLING HILLS
TD2111184 2QQ RULE 20B INSTALL UG

STATLER 16KV % WALTERIA SUB

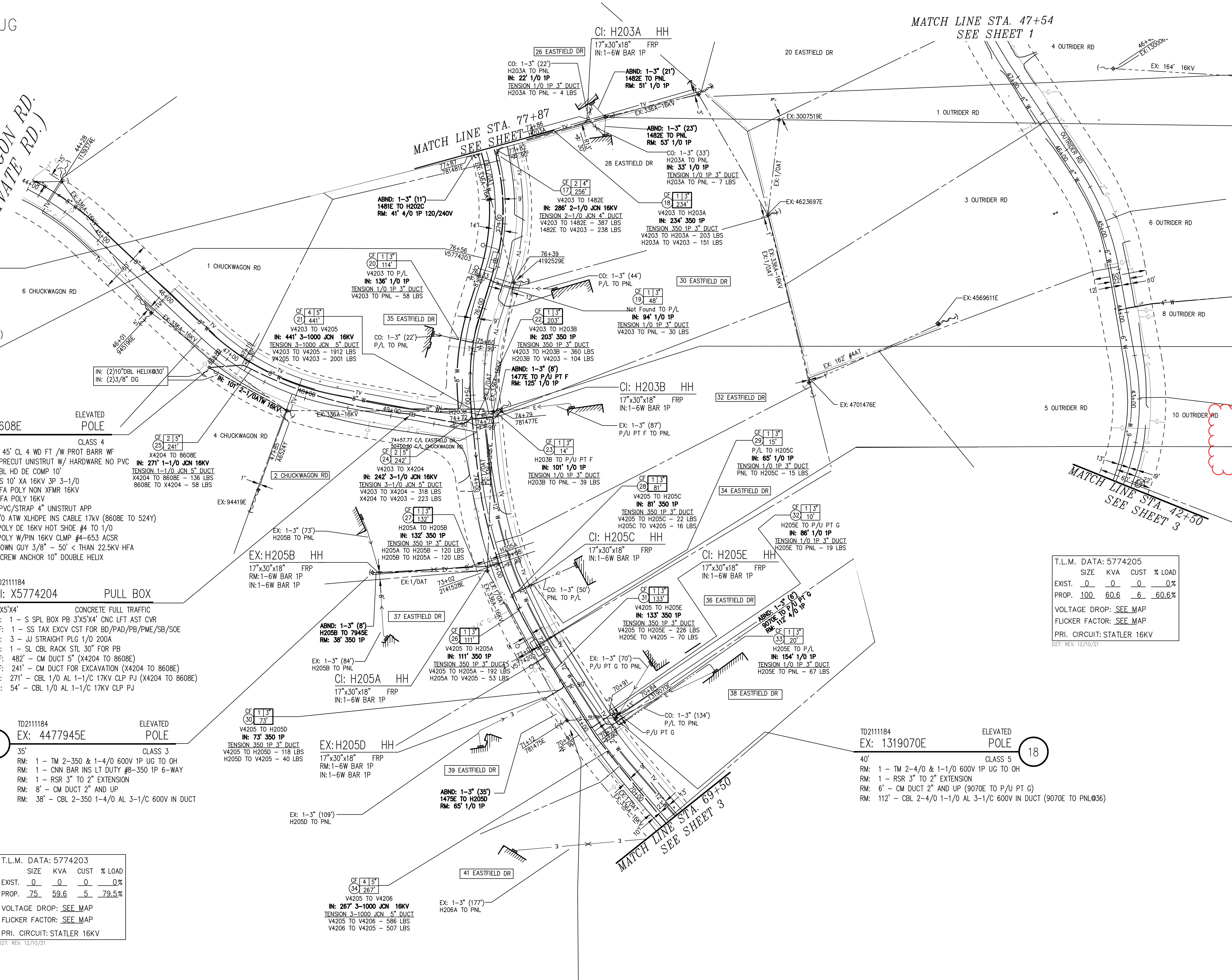

TD2111184
EX: 781481E — POLE (9)
50' — CLASS 1
RM: 1 – RSR PRECUT UNISTRUT W/ HARDWARE NO PVC
RM: 1 – TM 2-4/0 & 1-1/0 600V 1P UG TO OH
RM: 11' – CM DUCT 2" AND UP (1481E TO H202C)
RM: 1 – CNN BAR INS LT DUTY #8-350 1P 6-WAY (H202C)
RM: 1 – RSR PVC/STRAP 3" TO 2" UNISTRUT APP
RM: 41' – CBL 2-4/0 1-1/0 AL 3-1/C 600V IN DUCT (1481E TO H202C)

TD2111184
CI: V5774203 — VAULT (10)
7'x18'x8' — TUB STYLE
VENTS REQUIRED
CI: 1 – S V 7'X18'X8' TUB 2 PIECE
CF: 1 – SS TAX EXCV CST FOR VLT
IN: 2 – JJ 3-DBE 1000 600A
IN: 5 – JJ DBE 1/0 200A W/BUSH EXT 1/0 600A
IN: 4 – JJ DE DB RCPT INS W/TST PNT 600A
IN: 1 – SL CBL RACK STL 30" FOR VLT/MH
IN: 1 – SW UG SF6 LB RAG 5-WY 600A 17.5KV
LINE DEVICE ID:______
IN: 1 – TR UG BT MC F DE 75KVA 16KV 120/240 1P+
SN:______
CF: 512' – CM DUCT 2 1/2" TO 4" (V4203 TO 1482E)
CF: 1764' – CM DUCT 5" (V4203 TO V4205)
CF: 484' – CM DUCT 5" (V4203 TO X4204)
CF: 131' – CM DUCT FOR EXCAVATION (V4203 TO 1482E)
CF: 441' – CM DUCT FOR EXCAVATION (V4203 TO V4205)
CF: 70' – CM DUCT FOR EXCAVATION (V4203 TO X4204)
IN: 286' – CBL 1/0 AL 2/C 17KV CLP 220 MIL (V4203 TO 1482E)
MI: 114' – CBL 1/0 AL 2/C 17KV CLP 220 MIL
IN: 1323' – CBL 1000 AL 1-1/C 17KV CLP PJ (V4203 TO V4205)
MI: 264' – CBL 1000 AL 1-1/C 17KV CLP PJ
IN: 242' – CBL 1/0 AL 3-1/C 17KV CLP PJ (V4203 TO X4204)
MI: 48' – CBL 1/0 AL 3-1/C 17KV CLP PJ
CI: 1 – S HH POLY 17"X30"X18" LT TRAFFIC (H203A)
CI: 1 – S HH POLY 17"X30"X18" LT TRAFFIC (H203B)
CF: 1 – SS TAX EXCV CST FOR PLASTIC HH (H203B)
CF: 1 – SS TAX EXCV CST FOR PLASTIC HH (H203A)
IN: 1 – CNN BAR INS LT DUTY #8-350 1P 6-WAY (H203A)
IN: 1 – CNN BAR INS LT DUTY #8-350 1P 6-WAY (H203B)
CF: 234' – CM DUCT 2 1/2" TO 4" (V4203 TP H203A)
CF: 203' – CM DUCT 2 1/2" TO 4" (V4203 TO H203B)
CF: 6' – CM DUCT FOR EXCAVATION (V4203 TP H203A)
CF: 23' – CM DUCT FOR EXCAVATION (V4203 TO H203B)
IN: 234' – CBL (2) 350 MCM, (1) 4/0 600V CLP PLEX (V4203 TO H203A)
MI: 80' – CBL (2) 350 MCM, (1) 4/0 600V CLP PLEX
IN: 203' – CBL (2) 350 MCM, (1) 4/0 600V CLP PLEX (V4203 TO H203B)
CF: 48' – CM DUCT 2 1/2" TO 4" (V4203 TO P/L@30)
CF: 114' – CM DUCT 2 1/2" TO 4" (V4203 TO P/L @35)
CF: 14' – CM DUCT 2 1/2" TO 4" (H203B TO P/U PT F)
CF: 34' – CM DUCT FOR EXCAVATION (V4203 TO P/L@30)
CF: 27' – CM DUCT FOR EXCAVATION (V4203 TO P/L @35)
CF: 14' – CM DUCT FOR EXCAVATION (H203B TO P/U PT F)
CF: 41' – CM DUCT FOR EXCAVATION
IN: 22' – CBL 2-1/0 1-2 AL 3-1/C 600V CLP PLEX (H203A TO PNL@26)
MI: 77' – CBL 2-1/0 1-2 AL 3-1/C 600V CLP PLEX
IN: 33' – CBL 2-1/0 1-2 AL 3-1/C 600V CLP PLEX (H203A TO PNL@28)
IN: 136' – CBL 2-1/0 1-2 AL 3-1/C 600V CLP PLEX (V4203 TO PNL@35)
IN: 94' – CBL 2-1/0 1-2 AL 3-1/C 600V CLP PLEX (V4203 TO PNL@30)
IN: 101' – CBL 2-1/0 1-2 AL 3-1/C 600V CLP PLEX (H203B TO PNL@32)

LINE DEVICE ID# GS7206
TO BE PROVIDED BY DISTRICT AT THE TIME OF INSTALL
D19: Rev. 10/26/20

TD2111184
IN: 4998608E — ELEVATED POLE (13)
45' — CLASS 4
IN: 1 – POLE 45' CL 4 WD FT /W PROT BARR WF
IN: 1 – RSR PRECUT UNISTRUT W/ HARDWARE NO PVC
IN: 1 – XA DBL HD DE COMP 10'
IN: 1 – PH CS 10' XA 16KV 3P 3-1/0
IN: 1 – SA HFA POLY NON XFMR 16KV
IN: 2 – SA HFA POLY 16KV
IN: 1 – RSR PVC/STRAP 4" UNISTRUT APP
IN: 202' – 1/0 ATW XLHDPE INS CABLE 17KV (8608E TO 524Y)
IN: 6 – INS POLY DE 16KV HOT SHOE #4 TO 1/0
IN: 3 – INS POLY W/PIN 16KV CLMP #4-653 ACSR
IN: 2 – AG DOWN GUY 3/8" – 50' < THAN 22.5KV HFA
IN: 2 – AG SCREW ANCHOR 10" DOUBLE HELIX

TD2111184
CI: X5774204 — PULL BOX (12)
3'X5'X4' — CONCRETE FULL TRAFFIC
CI: 1 – S SPL BOX PB 3'X5'X4' CNC LFT AST CVR
CF: 1 – SS TAX EXCV CST FOR BD/PAD/PB/PME/SB/SOE
IN: 3 – JJ STRAIGHT PLG 1/0 200A
IN: 1 – SL CBL RACK STL 30" FOR PB
CF: 482' – CM DUCT 5" (X4204 TO 8608E)
CF: 241' – CM DUCT FOR EXCAVATION (X4204 TO 8608E)
IN: 271' – CBL 1/0 AL 1-1/C 17KV CLP PJ (X4204 TO 8608E)
MI: 54' – CBL 1/0 AL 1-1/C 17KV CLP PJ

TD2111184
EX: 4477945E — ELEVATED POLE (16)
35' — CLASS 3
RM: 1 – TM 2-350 & 1-4/0 600V 1P UG TO OH
RM: 1 – CNN BAR INS LT DUTY #8-350 1P 6-WAY
RM: 1 – RSR 3" TO 2" EXTENSION
RM: 8' – CM DUCT 2" AND UP
RM: 38' – CBL 2-350 1-4/0 AL 3-1/C 600V IN DUCT

T.L.M. DATA: 5774203

	SIZE	KVA	CUST	% LOAD
EXIST.	0	0	0	0%
PROP.	75	59.6	5	79.5%

VOLTAGE DROP: SEE MAP
FLICKER FACTOR: SEE MAP
PRI. CIRCUIT: STATLER 16KV
D27: REV. 12/10/21

V5774203	VD=1.84 FL=3.26 200 PANEL 120/240V 1P 16.6KW 5TONS 26 EASTFIELD DR ROLLING HILLS ,CA 90274	VD=1.82 FL=3.21 200 PANEL 120/240V 1P 10KW 5TONS 28 EASTFIELD DR ROLLING HILLS,CA 90274	VD=0.31 FL=2.93 200 PANEL 120/240V 1P 4.5KW 5TONS 30 EASTFIELD DR ROLLING HILLS,CA 90274	VD=0.7 FL=4.6 200 PANEL 120/240V 1P 5.6KW 5TONS 32 EASTFIELD DR ROLLING HILLS ,CA 90274	VD=1.68 FL=3.75 200 PANEL 120/240V 1P 17KW 5TONS 35 EASTFIELD DR ROLLING HILLS,CA 90274	
V5774205	VD=1.04 FL=4.07 200 PANEL 120/240V 1P 4.9KW 5TONS 2 CHUCKWAGON RD ROLLING HILLS,CA 90274	VD=0.91 FL=2.7 200 PANEL 120/240V 1P 13.3KW 5TONS 34 EASTFIELD DR ROLLING HILLS,CA 90274	VD=1.23 FL=3.51 200 PANEL 120/240V 1P 12.7KW 5TONS 36 EASTFIELD DR ROLLING HILLS,CA 90274	VD=1.26 FL=4.28 200 PANEL 120/240V 1P 7.8KW 5TONS 37 EASTFIELD DR ROLLING HILLS ,CA 90274	VD=0.44 FL=4.85 200 PANEL 120/240V 1P 0.1KW 5TONS 38 EASTFIELD DR ROLLING HILLS,CA 90274	VD=1.56 FL=3.51 200 PANEL 120/240V 1P 15.9KW 5TONS 39 EASTFIELD DR ROLLING HILLS ,CA 90274

TD2111184
EX: 781475E — ELEVATED POLE (17)
50' — CLASS 2
RM: 1 – TM 2-1/0 & 1-#2 600V 1P UG TO OH
RM: 1 – CNN BAR INS LT DUTY #8-350 1P 6-WAY (H205D)
RM: 1 – RSR 3" TO 2" EXTENSION
RM: 35' – CM DUCT 2" AND UP (1475E TO H205D)
RM: 65' – CBL 2-1/0 1-#2 AL 3-1/C 600V IN DUCT (1475E TO H205D)

NOTE TO CREW:
WORK WITH RELATED TD2111183 R20B OH REMOVAL

TD2111184
EX: 1319070E — ELEVATED POLE (18)
40' — CLASS 5
RM: 1 – TM 2-4/0 & 1-1/0 600V 1P UG TO OH
RM: 1 – RSR 3" TO 2" EXTENSION
RM: 6' – CM DUCT 2" AND UP (9070E TO P/U PT G)
RM: 112' – CBL 2-4/0 1-1/0 AL 3-1/C 600V IN DUCT (9070E TO PNL@36)

T.L.M. DATA: 5774205

	SIZE	KVA	CUST	% LOAD
EXIST.	0	0	0	0%
PROP.	100	60.6	6	60.6%

VOLTAGE DROP: SEE MAP
FLICKER FACTOR: SEE MAP
PRI. CIRCUIT: STATLER 16KV
D27: REV. 12/10/21

EX: 781483E — POLE
45' — CLASS 1
EX: 100KVA 16KV 120/240

TD2111184
EX: 781482E — ELEVATED POLE (11)
45' — CLASS 3
EX: 25KV 16KV 120/240
RM: 1 – RSR PRECUT UNISTRUT W/ HARDWARE NO PVC
RM: 2 – TM 2-1/0 & 1-#2 600V 1P UG TO OH
RM: 2 – RSR PVC/STRAP 3" TO 2" UNISTRUT APP
RM: 21' – CM DUCT 2" AND UP (1482E TO PNL@26)
RM: 23' – CM DUCT 2" AND UP (1482E TO PNL@28)
RM: 53' – CBL 2-1/0 1-2 AL 3-1/C 600V CLP PLEX (1482E TO PNL@28)
RM: 51' – CBL 2-1/0 1-2 AL 3-1/C 600V CLP PLEX (1482E TO PNL@26)
IN: 1 – RSR PRECUT UNISTRUT W/ HARDWARE NO PVC
IN: 1 – XA DBL HD DE COMP 10'
IN: 2 – FE FH SMD20 17" BLF 200A 16KV 1P
IN: 1 – PH CS 10' XA 16KV 1P 2-1/0
IN: 1 – SA HFA POLY NON XFMR 16KV
IN: 1 – SA HFA POLY 16KV
IN: 2 – INS POLY DE 16KV HOT SHOE #4 TO 1/0
IN: 1 – RSR PVC/STRAP 3" UNISTRUT APP
IN: 1 – AG DOWN GUY 9/32" – 50' LESS THAN 22.5KV
IN: 1 – AG SCREW ANCHOR 10" DOUBLE HELIX

TD2111184
EX: 781477E — ELEVATED POLE (14)
55' — CLASS 1
RM: 1 – TM 2-1/0 & 1-#2 600V 1P UG TO OH
RM: 1 – RSR 3" TO 2" EXTENSION
RM: 8' – CM DUCT 2" AND UP (1477E TO P/U PT F)
RM: 125' – CBL 2-1/0 1-2 AL 3-1/C 600V CLP PLEX (1477E TO PNL@32)

TD2111184
CI: V5774205 — VAULT (15)
7'x18'x8' — TUB STYLE
VENTS REQUIRED
CI: 1 – S V 7'X18'X8' TUB 2 PIECE
CF: 1 – SS TAX EXCV CST FOR VLT
IN: 2 – JJ 3-DBE 1000 600A
IN: 2 – JJ DBE 1/0 200A W/BUSH EXT 1/0 600A
IN: 4 – JJ DE DB RCPT INS W/TST PNT 600A
IN: 1 – SL CBL RACK STL 30" FOR VLT/MH
IN: 1 – SW UG SF6 LB RAG 4-WY 600A 17.5KV
LINE DEVICE ID:______
IN: 1 – TR UG BT MC F DE 100KVA 16KV 120/240 1P+
SN:______
CF: 1068' – CM DUCT 5" (V4205 TO V4206)
CF: 267' – CM DUCT FOR EXCAVATION (V4205 TO V4206)
IN: 801' – CBL 1000 AL 1-1/C 17KV CLP PJ
MI: 162' – CBL 1000 AL 1-1/C 17KV CLP PJ
CI: 1 – S HH POLY 17"X30"X18" LT TRAFFIC (H205A)
CI: 1 – S HH POLY 17"X30"X18" LT TRAFFIC (H205C)
CI: 1 – S HH POLY 17"X30"X18" LT TRAFFIC (H205E)
CF: 1 – SS TAX EXCV CST FOR PLASTIC HH (H205A)
CF: 1 – SS TAX EXCV CST FOR PLASTIC HH (H205C)
CF: 1 – SS TAX EXCV CST FOR PLASTIC HH (H205E)
IN: 1 – CNN BAR INS LT DUTY #8-350 1P 6-WAY (H205D)
IN: 1 – CNN BAR INS LT DUTY #8-350 1P 6-WAY (H205A)
CF: 111' – CM DUCT 2 1/2" TO 4" (V4205 TO H205A)
CF: 132' – CM DUCT 2 1/2" TO 4" (H205A TO H205B)
CF: 81' – CM DUCT 2 1/2" TO 4" (V4205 TO H205C)
CF: 73' – CM DUCT 2 1/2" TO 4" (V4205 TO H205D)
CF: 133' – CM DUCT 2 1/2" TO 4" (V4205 TO H205E)
CF: 10' – CM DUCT FOR EXCAVATION (V4205 TO H205A)
CF: 132' – CM DUCT FOR EXCAVATION (H205A TO H205B)
CF: 17' – CM DUCT FOR EXCAVATION (V4205 TO H205C)
CF: 25' – CM DUCT FOR EXCAVATION (V4205 TO H205D)
CF: 27' – CM DUCT FOR EXCAVATION (V4205 TO H205E)
IN: 111' – CBL (2) 350 MCM, (1) 4/0 600V CLP PLEX (V4205 TO H205A)
MI: 106' – CBL (2) 350 MCM, (1) 4/0 600V CLP PLEX
IN: 132' – CBL (2) 350 MCM, (1) 4/0 600V CLP PLEX (H205A TO H205B)
IN: 81' – CBL (2) 350 MCM, (1) 4/0 600V CLP PLEX (V4205 TO H205C)
IN: 73' – CBL (2) 350 MCM, (1) 4/0 600V CLP PLEX (V4205 TO H205D)
IN: 133' – CBL (2) 350 MCM, (1) 4/0 600V CLP PLEX (V4205 TO H205E)
IN: 1 – CNN BAR INS LT DUTY #8-350 1P 6-WAY (H205B)
IN: 1 – CNN BAR INS LT DUTY #8-350 1P 6-WAY (H205C)
IN: 1 – CNN BAR INS LT DUTY #8-350 1P 6-WAY (H205E)
CF: 15' – CM DUCT 2 1/2" TO 4" (H205C TO P/L@34)
CF: 10' – CM DUCT 2 1/2" TO 4" (H205E TO P/L@36)
CF: 20' – CM DUCT 2 1/2" TO 4" (H205E TO P/L@38)
CF: 15' – CM DUCT FOR EXCAVATION (H205C TO P/L@34)
CF: 20' – CM DUCT FOR EXCAVATION (H205E TO P/L@38)
CF: 10' – CM DUCT FOR EXCAVATION (H205E TO P/L@36)
IN: 65' – CBL 2-1/0 1-2 AL 3-1/C 600V CLP PLEX (H205C TO PNL@34)
MI: 61' – CBL 2-1/0 1-2 AL 3-1/C 600V CLP PLEX
IN: 86' – CBL 2-1/0 1-2 AL 3-1/C 600V CLP PLEX (H205E TO PNL@36)
IN: 154' – CBL 2-1/0 1-2 AL 3-1/C 600V CLP PLEX (H205E TO PNL@38)

LINE DEVICE ID# GS7207
TO BE PROVIDED BY DISTRICT AT THE TIME OF INSTALL
D19: Rev. 10/26/20

SOUTHERN CALIFORNIA EDISON — An EDISON INTERNATIONAL Company
SCALE: 1" = 60'
0 60 120

PRELIMINARY
Not For Construction

DISTRICT 44 – SOUTH BAY		PROJ. MGR. PHONE WILLIAMS, JENNA J 714-430-7842		PLANNER PHONE WILLIAMS, JENNA J 310-720-6086	DESIGNER CHIN, ELIZABETH	
PROJECT NO. 2612821	SERVICE REQUEST 3500715	MSR NO.	PRODUCT-1 2111184-RULE 20B-UG INSTALL			ASSOC DESGN
CIRCUIT / VOLTAGE STATLER 16KV		GPS	PRODUCT-2			ASSOC DESGN
SUB / PG NO. WALTERIA SUB		CIRCUIT CODE	PRODUCT-3			ASSOC DESGN
INVENTORY MAP VARIOUS		J.P.A. NO.		PROPOSED CONSTRUCTION (LOCATION) RULE 20B 45 EASTFIELD DR ROLLING HILLS CA 90274		
P 12/29/2023	MUDILA K	J WILLIAMS	E CHIN	16484		
P 11/28/2023	MUDILA K	J WILLIAMS	E CHIN	16484		
TYPE DATE	APPROVED BY	CHECKED BY	DRAWN BY	PAX #	SHEET 6 OF 7	DESIGN\DRWG NO. 1608857_0.01
Southern California Edison Company						

FILE NAME:1608857_0.01.DWG SAVE DATE:12/30/2023 12:44 PM SAVED BY:KANGULM

NOTE TO CREW:
WORK WITH RELATED TD2111183 R20B OH REMOVAL

CITY OF ROLLING HILLS
TD2111184 2QQ RULE 20B INSTALL UG

STATLER 16KV % WALTERIA SUB

P5653070	VD=1.38 FL=3.58 200 PANEL 120/240V 1P 20KW 5TONS 40 EASTFIELD DR ROLLING HILLS ,CA 90274	VD=0.47 FL=3.88 200 PANEL 120/240V 1P 5.9KW 5TONS 41 EASTFIELD DR ROLLING HILLS ,CA 90274		X5657648	VD=0 100 PED-GEN 120/240V 1P 0KW 2TONS 46 EASTFIELD W/CHKWGN PED ROLLING HILLS ,CA 90274	
V5774207	VD=0.94 FL=4.18 200 PANEL 120/240V 1P 8KW 5TONS 9 OUTRIDER RD ROLLING HILLS,CA 90274	VD=1.87 FL=3.66 200 PANEL 120/240V 1P 18.3KW 5TONS 13 OUTRIDER RD ROLLINGS HILLS,CA 90274	VD=2.42 FL=4.96 200 PANEL 120/240V 1P 14.8KW 5TONS 24 OUTRIDER RD ROLLING HILLS DR,CA 90274	VD=0.92 FL=4.54 200 PANEL 120/240V 1P 7KW 5TONS 42 EASTFIELD DR ROLLING HILLS ,CA 90274	VD=0.32 FL=3.01 200 PANEL 120/240V 1P 4.1KW 5TONS 44 EASTFIELD DR ROLLING HILLS ,CA 90274	VD=1.19 FL=2.99 200 PANEL 120/240V 1P 9.9KW 5TONS 46 EASTFIELD DR L97 ROLLING HILLS ,CA 90274

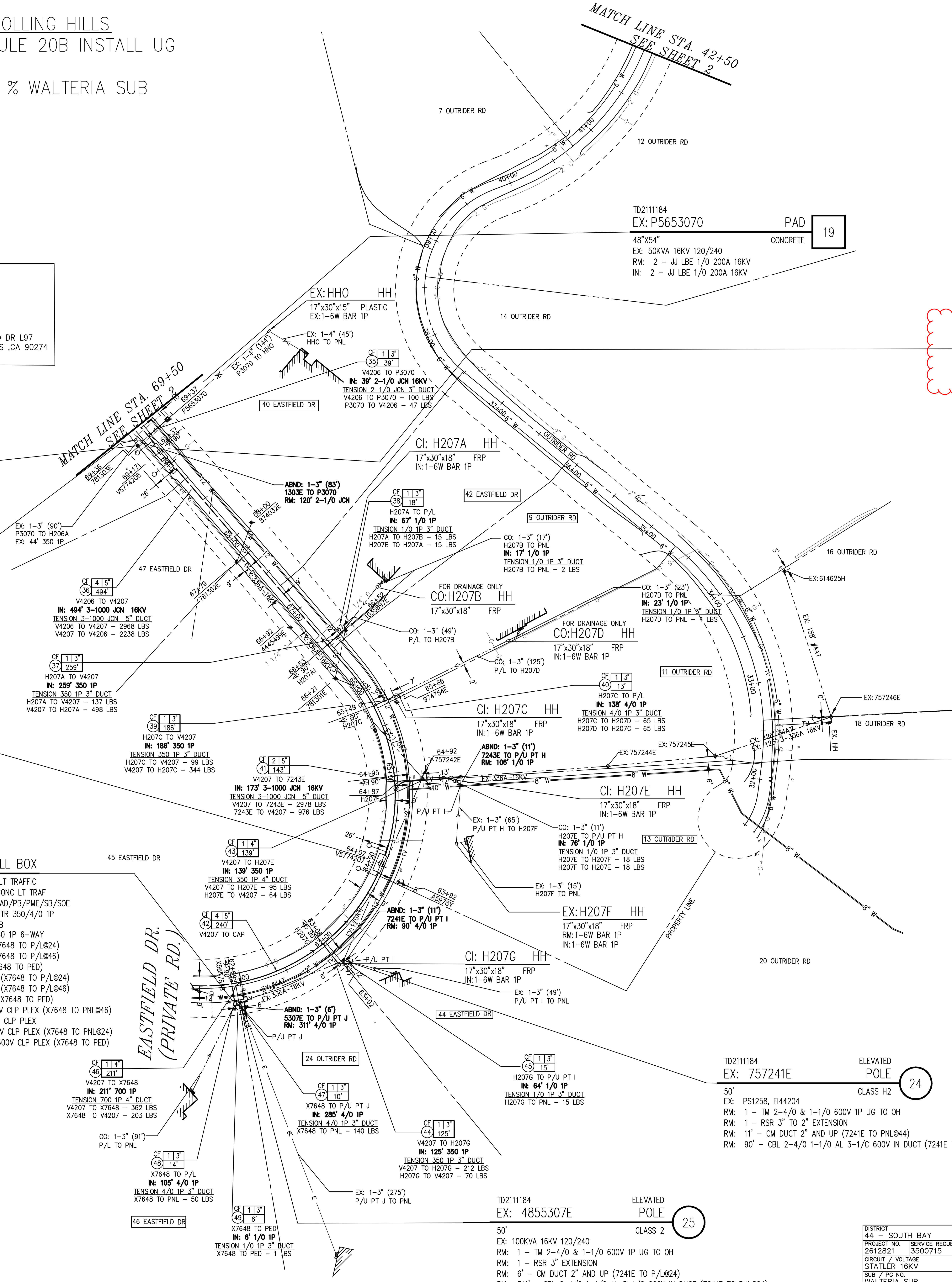

TD2111184
EX: P5653070 — PAD — 19
CONCRETE
48"X54"
EX: 50KVA 16KV 120/240
RM: 2 - JJ LBE 1/0 200A 16KV
IN: 2 - JJ LBE 1/0 200A 16KV

LINE DEVICE ID# GS7208
TO BE PROVIDED BY DISTRICT
AT THE TIME OF INSTALL
D19: Rev. 10/26/20

TD2111184
CI: V5774206 — VAULT — 20
TUB STYLE
7'x18'x8'
CI: 1 - S V 7'X18'X8' TUB 2 PIECE
CF: 1 - SS TAX EXCV CST FOR VLT
IN: 2 - JJ 3-DBE 1000 600A
IN: 2 - JJ DBE 1/0 200A W/BUSH EXT 1/0 600A
IN: 4 - JJ DE DB RCPT INS W/TST PNT 600A
IN: 1 - SL CBL RACK STL 30" FOR VLT/MH
IN: 1 - SW UG SF6 LB RAG 4-WY 600A 17.5KV
LINE DEVICE ID:
CF: 39' - CM DUCT 2 1/2" TO 4" (V4206 TO P3070)
CF: 1976' - CM DUCT 5" (V4206 TO V4207)
CF: 39' - CM DUCT FOR EXCAVATION (V4206 TO P3070)
CF: 494' - CM DUCT FOR EXCAVATION (V4206 TO V4207)
IN: 1482' - CBL 1000 AL 1-1/C 17KV CLP PJ (V4206 TO V4207)
MI: 297' - CBL 1000 AL 1-1/C 17KV CLP PJ
IN: 39' - CBL 1/0 AL 2/C 17KV CLP 220 MIL (V4206 TO P3070)
MI: 15' - CBL 1/0 AL 2/C 17KV CLP 220 MIL

TD2111184
EX: 781303E — ELEVATED POLE — 21
CLASS 1
50'
RM: 1 - RSR PRECUT UNISTRUT W/ HARDWARE NO PVC
RM: 1 - PH CS 10' XA 16KV 1P 2-1/0
RM: 1 - SA HFA POLY NON XFMR 16KV
RM: 1 - SA HFA POLY 16KV
RM: 1 - RSR PVC/STRAP 3" UNISTRUT APP
RM: 120' - CBL 1/0 AL 2/C 17KV CLP 220 MIL (1303E TO P3070)
RM: 83' - CM DUCT 2" AND UP (1303E TO P3070)

EX:H206A HH
17"x30"x15" PLASTIC
EX:1-6W BAR 1P

LINE DEVICE ID# GS7209
TO BE PROVIDED BY DISTRICT
AT THE TIME OF INSTALL
D19: Rev. 10/26/20

TD2111184
CI: V5774207 — VAULT — 22
TUB STYLE
7'x18'x8'
VENTS REQUIRED
CI: 1 - S V 7'X18'X8' TUB 2 PIECE
CF: 1 - SS TAX EXCV CST FOR VLT
IN: 3 - JJ 3-DBE 1000 600A
IN: 2 - JJ DBE 1/0 200A W/BUSH EXT 1/0 600A
IN: 4 - JJ DE DB RCPT INS W/TST PNT 600A
IN: 1 - SL CBL RACK STL 30" FOR VLT/MH
IN: 1 - CNN PTAIL STRT FOR 200A MTR 350/4/0 1P
IN: 1 - SW UG SF6 LB RAG 5-WY 600A 17.5KV
LINE DEVICE ID:
IN: 1 - TR UG BT MC F DE 100KVA 16KV 120/240 1P+
SN:
CF: 287' - CM DUCT 5" (V4207 TO 7243E)
CF: 960' - CM DUCT 5" (V4207 TO CAP)
CF: 143' - CM DUCT FOR EXCAVATION (V4207 TO 7243E)
CF: 240' - CM DUCT FOR EXCAVATION (V4207 TO CAP)
IN: 519' - CBL 1000 AL 1-1/C 17KV CLP PJ (V4207 TO 7243E)
MI: 102' - CBL 1000 AL 1-1/C 17KV CLP PJ
CI: 1 - S HH POLY 17"X30"X18" LT TRAFFIC (H207A)
CI: 1 - S HH POLY 17"X30"X18" LT TRAFFIC (H207C)
CI: 1 - S HH POLY 17"X30"X18" LT TRAFFIC (H207G)
CI: 1 - S HH POLY 17"X30"X18" LT TRAFFIC (H207E)
CF: 4 - SS TAX EXCV CST FOR PLASTIC HH
IN: 1 - CNN BAR INS LT DUTY #8-350 1P 6-WAY (H207G)
IN: 1 - CNN BAR INS LT DUTY #8-350 1P 6-WAY (H207C)
CF: 186' - CM DUCT 2 1/2" TO 4" (V4207 TO H207C)
CF: 139' - CM DUCT 2 1/2" TO 4" (V4207 TO H207E)
CF: 125' - CM DUCT 2 1/2" TO 4" (V4207 TO H207G)
CF: 211' - CM DUCT 2 1/2" TO 4" (V4207 TO X7648)
CF: 259' - CM DUCT 2 1/2" TO 4" (V4207 TO H207A)
CF: 22' - CM DUCT FOR EXCAVATION (V4207 TO H207C)
CF: 67' - CM DUCT FOR EXCAVATION (V4207 TO H207E)
CF: 29' - CM DUCT FOR EXCAVATION (V4207 TO H207G)
CF: 21' - CM DUCT FOR EXCAVATION (V4207 TO X7648)
CF: 20' - CM DUCT FOR EXCAVATION (V4207 TO H207A)
IN: 186' - CBL (2) 350 MCM, (1) 4/0 600V CLP PLEX (V4207 TO H207C)
MI: 145' - CBL (2) 350 MCM, (1) 4/0 600V CLP PLEX
IN: 139' - CBL (2) 350 MCM, (1) 4/0 600V CLP PLEX (V4207 TO H207E)
IN: 125' - CBL (2) 350 MCM, (1) 4/0 600V CLP PLEX (V4207 TO H207G)
IN: 259' - CBL (2) 350 MCM, (1) 4/0 600V CLP PLEX (V4207 TO H207A)
IN: 211' - CBL (2) 700, (1) 350 600V CLP PLEX (V4207 TO X7648)
MI: 42' - CBL (2) 700, (1) 350 600V CLP PLEX
IN: 1 - CNN BAR INS LT DUTY #8-350 1P 6-WAY (H207B)
IN: 1 - CNN BAR INS LT DUTY #8-350 1P 6-WAY (H207D)
IN: 1 - CNN BAR INS LT DUTY #8-350 1P 6-WAY (H207E)
IN: 1 - CNN BAR INS LT DUTY #8-350 1P 6-WAY (H207A)
IN: 1 - CNN BAR INS LT DUTY #8-350 1P 6-WAY (H207F)
CF: 18' - CM DUCT 2 1/2" TO 4" (H207A TO P/L)
CF: 13' - CM DUCT 2 1/2" TO 4" (H207C TO P/L)
CF: 15' - CM DUCT 2 1/2" TO 4" (H207G TO P/L@44)
CF: 18' - CM DUCT FOR EXCAVATION (H206B TO P/L)
CF: 13' - CM DUCT FOR EXCAVATION (H207C TO P/L)
CF: 15' - CM DUCT FOR EXCAVATION (H207G TO P/L@44)
IN: 67' - CBL 2-1/0 1-2 AL 3-1/C 600V CLP PLEX (H207A TO H207B)
IN: 17' - CBL 2-1/0 1-2 AL 3-1/C 600V CLP PLEX (H207B TO PNL@42)
MI: 50' - CBL 2-1/0 1-2 AL 3-1/C 600V CLP PLEX
IN: 23' - CBL 2-1/0 1-2 AL 3-1/C 600V CLP PLEX (H207D TO PNL@9)
IN: 76' - CBL 2-1/0 1-2 AL 3-1/C 600V CLP PLEX (H207E TO H207F)
IN: 64' - CBL 2-1/0 1-2 AL 3-1/C 600V CLP PLEX (H207G TO PNL@44)
IN: 138' - CBL (2) 4/0, (1) 1/0 600V CLP PLEX (H207C TO H207D)
MI: 3' - CBL (2) 4/0, (1) 1/0 600V CLP PLEX

T.L.M. DATA: 5774207	SIZE	KVA	CUST	% LOAD
EXIST.	0	0	0	0%
PROP.	100	68.9	6	68.9%

VOLTAGE DROP: SEE MAP
FLICKER FACTOR: SEE MAP
PRI. CIRCUIT: STATLER 16KV
D27: REV. 12/10/21

TD2111184
CI: X5657648 — PULL BOX — 26
CONCRETE LT TRAFFIC
2'-6"x4'x3'-6"
CI: 1 - S SPL BOX PB 2'6"X4'X3'6" CONC LT TRAF
CF: 1 - SS TAX EXCV CST FOR BD/PAD/PB/PME/SB/SOE
IN: 2 - CNN PTAIL STRT FOR 200A MTR 350/4/0 1P
IN: 1 - SL CBL RACK STL 30" FOR PB
IN: 1 - CNN BAR INS LT DUTY #8-350 1P 6-WAY
CF: 10' - CM DUCT 2 1/2" TO 4" (X7648 TO P/L@24)
CF: 14' - CM DUCT 2 1/2" TO 4" (X7648 TO P/L@46)
CF: 6' - CM DUCT 2 1/2" TO 4" (X7648 TO PED)
CF: 10' - CM DUCT FOR EXCAVATION (X7648 TO P/L@24)
CF: 14' - CM DUCT FOR EXCAVATION (X7648 TO P/L@46)
CF: 6' - CM DUCT FOR EXCAVATION (X7648 TO PED)
IN: 105' - CBL (2) 4/0, (1) 1/0 600V CLP PLEX (X7648 TO PNL@46)
MI: 78' - CBL (2) 4/0, (1) 1/0 600V CLP PLEX
IN: 285' - CBL (2) 4/0, (1) 1/0 600V CLP PLEX (X7648 TO PNL@24)
IN: 6' - CBL 2-1/0 1-2 AL 3-1/C 600V CLP PLEX (X7648 TO PED)

TD2111184
EX: 757243E — ELEVATED POLE — 23
CLASS 3
50'
EX: 25KV 16KV 120/240
RM: 1 - RSR PRECUT UNISTRUT W/ HARDWARE NO PVC
RM: 1 - TM 2-1/0 & 1-#2 600V 1P UG TO OH
RM: 1 - CNN BAR INS LT DUTY #8-350 1P 6-WAY (H207F)
RM: 1 - RSR PVC/STRAP 3" TO 2" UNISTRUT APP
RM: 11' - CM DUCT 2" AND UP (7243E TO P/U PT H)
RM: 106' - CBL 2-1/0 1-2 AL 3-1/C 600V CLP PLEX (7243E TO PNL@13)
IN: 1 - RSR PRECUT UNISTRUT W/ HARDWARE NO PVC
IN: 1 - PH CS 10' XA 16KV 3P 3-1000
IN: 1 - SA HFA POLY NON XFMR 16KV
IN: 2 - SA HFA POLY 16KV
IN: 1 - RSR PVC/STRAP 5" UNISTRUT APP
IN: 2 - AG DOWN GUY 3/8" - 50' < THAN 22.5KV HFA

TD2111184
EX: 757241E — ELEVATED POLE — 24
CLASS H2
50'
EX: PS1258, FI44204
RM: 1 - TM 2-4/0 & 1-1/0 600V 1P UG TO OH
RM: 1 - RSR 3" TO 2" EXTENSION
RM: 11' - CM DUCT 2" AND UP (7241E TO PNL@44)
RM: 90' - CBL 2-4/0 1-1/0 AL 3-1/C 600V IN DUCT (7241E TO PNL@44)

TD2111184
EX: 4855307E — ELEVATED POLE — 25
CLASS 2
50'
EX: 100KVA 16KV 120/240
RM: 1 - TM 2-4/0 & 1-1/0 600V 1P UG TO OH
RM: 1 - RSR 3" EXTENSION
RM: 6' - CM DUCT 2" AND UP (7241E TO P/L@24)
RM: 311' - CBL 2-4/0 1-1/0 AL 3-1/C 600V IN DUCT (7241E TO PNL@24)

SOUTHERN CALIFORNIA EDISON — An EDISON INTERNATIONAL Company

SCALE: 1" = 60'
0 60 120

PRELIMINARY
Not For Construction

DISTRICT 44 - SOUTH BAY	PROJ. MGR. WILLIAMS, JENNA J PHONE 3106085194	PLANNER WILLIAMS, JENNA J PHONE 3106085194	DESIGNER CHIN, ELIZABETH
PROJECT NO. 2612821 / SERVICE REQUEST 3500715	MSR NO.	PRODUCT-1 2111184-RULE 20B-UG INSTALL	ASSOC DESGN
CIRCUIT / VOLTAGE STATLER 16KV	GPS	PRODUCT-2	ASSOC DESGN
SUB / PG NO. WALTERIA SUB	CIRCUIT CODE	PRODUCT-3	ASSOC DESGN
INVENTORY MAP VARIOUS	J.P.A. NO.	PROPOSED CONSTRUCTION (LOCATION) RULE 20B 45 EASTFIELD DR ROLLING HILLS CA 90274	

TYPE	DATE	APPROVED BY	CHECKED BY	DRAWN BY	PAX #
P	12/29/2023	MUDILA K	J WILLIAMS	E CHIN	16484
P	11/28/2023	MUDILA K	J WILLIAMS	E CHIN	16484

Southern California Edison Company
SHEET 7 OF 7
DESIGN\DRWG NO. 1608857_0.01

FILE NAME:1608857_0.01.DWG SAVE DATE:12/30/2023 12:44 PM SAVED BY:KANGULM

ROLLING HILLS COMMUNITY ASSOCIATION
1 Portuguese Bend Road, Rolling Hills, CA 90274
(310) 544-6222; Fax: (310) 544-6766

Attachment 2

AGREEMENT FOR EXCAVATION OF EASEMENTS

(Staff Use Only)	**Permit No. _____**	**Permit Fee $250 ☐ PAID ☐ INVOICED**
	Date Issued _____	**Expiration Date (90 Days) _____**
	Extension Approved _____	**Expiration Date _____**

The Rolling Hills Community Association grants permission to:

Company / Utility Name _____ Contact Person _____

Street Address _____ City, State, Zip _____

Phone _____ Email _____

May cut and excavate at:

_____
Property Address/Name of Street

In the area of:

_____
Describe job location

For the purpose of:

_____
Description of work

Power Outage/Service Turn-off Required: YES NO **Traffic Control Plan included: YES NO**

Note that any project that requires multiple vehicles and/or trailers be parked or located in any portion of any roadway at a work site or sites will require the applicant to attach to this application a Traffic Control Plan that complies with the "California Manual on Uniform Traffic Control Devices" (most current edition including most current revisions).

Applicant agrees that all work will be done in accordance with and limited to the submitted plans and with the attached requirements of this agreement and that the easement shall be restored to its original condition and left in a safe condition. To the extent appliable, all work shall comply with all laws and regulations regulating the activities of the applicant.

Prior to the commencement of any work, the applicant shall deliver to the Manager of the Rolling Hills Community Association a certificate of insurance naming the Rolling Hills Community Association as additionally insured for a minimum of three million dollars ($3,000,000).

Applicant shall place two inches of temporary pavement on all cuts in all types of existing pavement, or more as may be required by the Manager based on the nature and scope of the project. Applicant shall perform no work nor make any repairs until authorized by the Rolling Hills Community Association except to eliminate an emergency condition.

If excavation involves cutting the RHCA roadway, a minimum deposit of $2,500 must be made with the application prior to the start of work. That deposit amount may be adjusted upwards at the discretion of the Rolling Hills Community Association for projects with larger areas of excavation. When said cut or excavation has been filled and repaired to a safe and permanent condition to the Manager of the Association, that portion of the deposit not consumed by Rolling Hills

Community Association in its review and inspections shall be released and discharged. In the event that the initial deposit is deemed to be insufficient to cover the costs of the Rolling Hills Community Association in its review and inspections, further deposits may be required, and must be tendered within five working days of each such request.

All work sites, working conditions, and work performed must at all times comply with all federal, state, local government and agency laws, general orders, and regulations, including without limitation to those promulgated by OSHA, CAL/OSHA, and the California Public Utilities Commission.

The parties agree that if said cut or excavation made in a road is not filled and repaired to a satisfactory usable condition within seven calendar days after completion of the work the Manager shall forthwith cause the same to be filled and repaired and the cost shall be charged against the cash deposit posted with the application, or as may be increased by the Manager.

The parties agree that applicant shall be responsible for all loss or damage incurred by the Rolling Hills Community Association. The applicant shall indemnify, hold harmless, and defend the Rolling Hills Community Association in connection with all claims whatsoever regarding any work performed by the applicant in the streets, property, and easements of the Rolling Hills Community Association for a period of fifty (50) years from the date of completion of such work. The applicant shall have no right to settle or compromise any such claims without the express authority of the Board of Directors of the Rolling Hills Community Association.

_____	ROLLING HILLS COMMUNITY ASSN.
By: _____	By: _____

Notify the Association Office prior to starting work & once it is completed (310) 544-6222.

EXCAVATION AGREEMENT REQUIREMENTS

1. All work, unless otherwise specified, shall be completed in accordance with the specifications of the *Rolling Hills Community Association Trench Backing and Pavement Repair* guidelines.

2. One set of plans must be digitally submitted for consideration. Hard copies may be required at the discretion of staff.

3. A copy of this agreement and plans shall be kept on the job at all times. If a utility pole is being replaced, a copy of this permit must be provided to the gates with the delivery of the pole.

4. A traffic control plan that conforms to the latest edition of the State of California MUTCD must be submitted with the completed application. Traffic control measures are required and must be discussed with and approved by the RHCA's staff prior to issuing the permit. Flag men are required if any portion of a lane is closed. One lane of travel must be maintained at all times. If it is necessary to completely close the road, the contractor must contact the RHCA office a minimum of **TWO WEEKS** in advance to discuss and make proper arrangements.

5. Trail closed signs are required if any portion of a bridle trail is closed and the contractor must contact RHCA's Maintenance Supervisor at (310) 541-3544 to make such arrangements.

6. Utility poles or other structures that require a helicopter set must be arranged with the RHCA office a minimum of **TWO WEEKS** in advance to discuss and make proper arrangements.

7. The contractor is required to notify the RHCA Office prior to the start of work. It is the responsibility of the utility/contractor to notify any affected homeowners of power outages.

8. The contractor must acquire permission from the property owner prior to working or accessing any private property.

9. Proof of Dig Alert notifications for all areas subject to excavation must be provided in advance of the commencement of any underground work.

10. Dig Alert/USA and other utility markings on roads must be entirely removed at the completion of work. No permanent paint or other marking shall be permitted at any time.

11. Bridle Trails and road shoulders disturbed by excavation must be restored to original conditions (signs and mailboxes re-set, decomposed granite or other special surfaces replaced.)

12. If a utility pole is removed, it must be removed by the applicant from the area of the Rolling Hills Community Association for disposal or other disposition.

13. Applicant shall be legally and financially responsible for all damage caused by it to the property of the Rolling Hills Community Association and its members.

Attachment 3

Rolling Hills Community Association
TRENCH BACKFILL AND PAVEMENT REPAIRS

NOTES

BELOW GROUND

1A. SEE STANDARD PLAN

2A. FOR TRENCHES LONGER THAN 200' OR LARGER THAN 1,000 SQUARE FEET, A LICENSED SOILS ENGINEER SHALL BE PRESENT TO MONITOR THE NATIVE OR IMPORTED BACKFILL OPERATION AND TEST FOR COMPACTION AT 100' OR 200 SQUARE FOOT MAXIMUM INTERVALS.

3A. IN AREAS NOT IN EXISTING ROADWAY, BACKFILL SHALL BE COMPACTED TO A RELATIVE COMPACTION OF 90%

4A. EXCAVATED MATERIAL NOT APPROVED FOR USE IN TRENCH BACKFILL SHALL BE REMOVED FROM JOB SITE UNLESS OTHERWISE USED IN THE WORK.

5A. WHERE WET, UNSTABLE OR RUNNING SOIL IS ENCOUNTERED, SOLID SHEATHING IS REQUIRED FOR ALL VERTICAL TRENCH WALLS.

6A. ALL SHORING SHALL BE DESIGNED BY A CIVIL ENGINEER IN ACCORDANCE WITH SOIL REPORT.

VISIBLE SURFACE:

1B. CRACKS SHALL BE SEALED AND A TYPE 2 SLURRY SEAL COATING WITH 2% LATEX SHALL BE APPLIED FROM LANE LINE TO LANE LINE FOR LONGITUDINAL TRENCHES GREATER THAN 200' IN LENGTH FOR ANY LANE AFFECTED.

METHODOLOGY

1C. AT THE END OF EACH WORK DAY, ANY TRENCH IN AN ARTERIAL ROAD SHALL BE COVERED BY NON-SKID STEEL PLATES OR BE PAVED WITH TEMPORARY OR PERMANENT PAVEMENT FLUSH WITH ADJACENT PAVEMENT SURFACES. SECURED IN PLACE, RAMPED WITH A.C. AND NOT USED FOR MORE THAN 48 CONSECUTIVE HOURS ON THE SAME SEGMENT OR TRENCH. "PLATE AHEAD' SIGN9S0 SHALL BE PROPERTY INSTALLED WHEN PLATES ARE IN USE. OTHER CITY STREETS MAY HAVE LESSER REQUIREMENTS AND WILL BE CONSIDERED ON A CASE BY CASE BASIS.

2C. ALL TRAFFIC LANES SHALL BE CLEANED AND RESTORED FOR USE IMMEDIATELY UPON PLACEMENT OF TEMPORARY A.C. PAVEMENT, TRENCH PLATES AND/OR FINAL A.C. PAVEMENT.

3C. ALL TRAFFIC STRIPING AND/OR MARKING(S) REMOVED OR DAMAGED DURING CONSTRUCTION SHALL BE REPLACED IN KIND AS DIRECTED.

4C. TRAFFIC CONTROL SHALL BE PER CONTRACTORS "CONSTRUCTION TRAFFIC CONTROL PROCEDURES ON CITY STREETS" AS SUBMITTED TO AND APPROVED BY THE RHCA.

5C. A COLLECTION DEVICE SHALL BE USED TO COLLECT SEDIMENTS GENERATED DURING SAWCUTTING OPERATION.

6C. ALL PAVEMENT REMOVALS SHALL USE STRAIGHT LIGHT SAWCUTS A MINIMUM OF 1.5" DEEP.

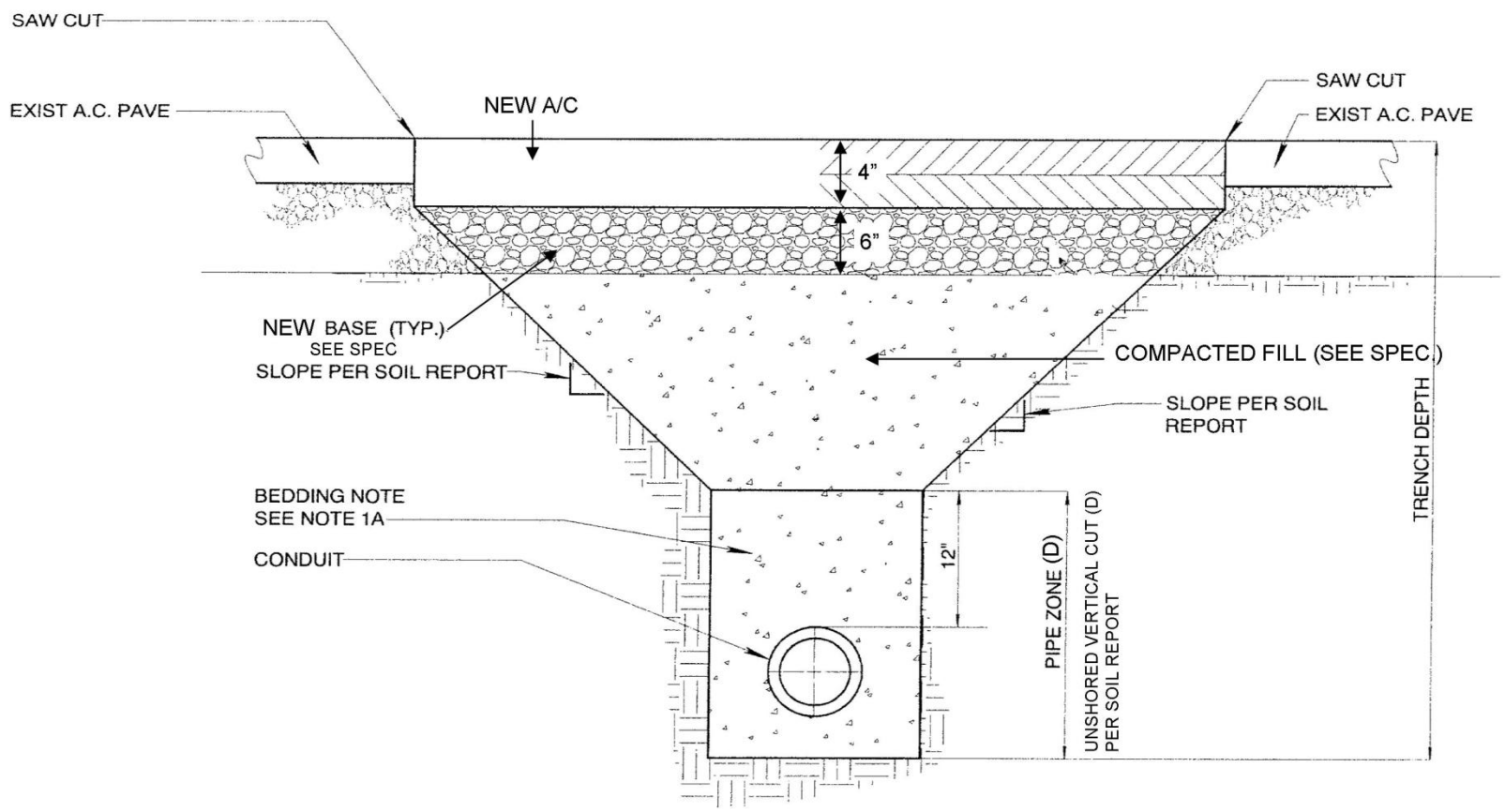

STANDARD DETAIL

UTILITY TRENCH T-SECTION

NOT TO SCALE

NOTE

THIS DETAIL APPLIES TO STREETS WITHIN
ROLLING HILLS COMMUNITY ASSOCIATION EASEMENT/
RIGHT OF WAY

ADOPTED BOD 2019-02-21 M:Road Standards/Utility Trench T-Section A

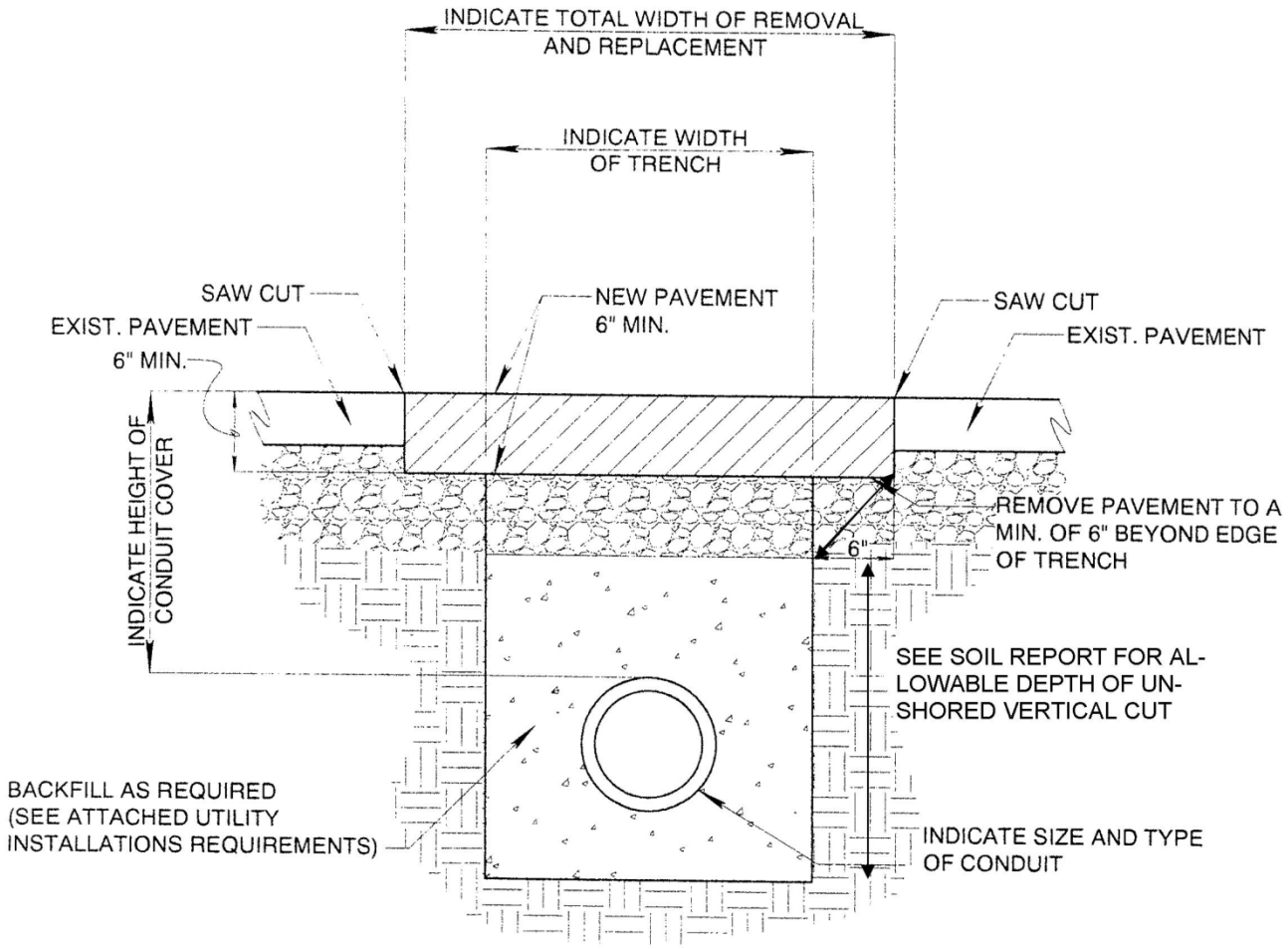

STANDARD DETAIL
UTILITY TRENCH T-SECTION

NOT TO SCALE

NOTE

THIS DETAIL APPLIES TO STREETS WITHIN ROLLING HILLS COMMUNITY ASSOCIATION EASEMENT/RIGHT OF WAY RIGHT OF WAY

ADOPTED BOD 2019-02-19 - Utility Trench T-Section B

EXHIBIT "A-1"

FEDERAL PROVISIONS

During the performance of this contract, Designer shall comply with all applicable federal laws and regulations including but not limited to the federal contract provisions in this Exhibit.

1. **CONTRACTING WITH SMALL AND MINORITY FIRMS, WOMEN'S BUSINESS ENTERPRISE AND LABOR SURPLUS AREA FIRMS (2 C.F.R. § 200.321)**

   (A) Designer shall be subject to 2 C.F.R. § 200.321 and will take affirmative steps to assure that minority firms, women's business enterprises, and labor surplus area firms are used when possible and will not be discriminated against on the grounds of race, color, religious creed, sex, or national origin in consideration for an award.

   (B) Affirmative steps shall include:

      (i) Placing qualified small and minority businesses and women's business enterprises on solicitation lists;

      (ii) Assuring that small and minority businesses, and women's business enterprises are solicited whenever they are potential sources;

      (iii) Dividing total requirements, when economically feasible, into smaller tasks or quantities to permit maximum participation by small and minority business, and women's business enterprises;

      (iv) Establishing delivery schedules, where the requirement permits, which encourage participation by small and minority business, and women's business enterprises; and

      (v) Using the services/assistance of the Small Business Administration (SBA), and the Minority Business Development Agency (MBDA) of the Department of Commerce.

   Designer shall submit evidence of compliance with the foregoing affirmative steps when requested by the City.

2. **COST PRINCIPLES (2 C.F.R. PART 200, SUBPART E)**

   (A) Costs under this contract must conform to the cost principles set forth under the Uniform Rules at 2 C.F.R. Part 200, subpart E ("Cost Principles"). In general, costs must (i) be necessary and reasonable; (ii) allocable to the grant award; (iii) conform to any limitations or exclusions set forth in the Cost Principles; (iv) be adequately documented; and (v) be determined in accordance with generally accepted accounting principles ("GAAP"), except, for state and local governments and Indian tribes only, as otherwise provided for in 2 C.F.R. Part 200, subpart E. 2 C.F.R. § 200.403. Costs that are determined unallowable pursuant to a federal audit are subject to repayment by Designer.

3. **ACCESS TO RECORDS & RECORD RETENTION (2 C.F.R. 200.336)**

(A) Designer shall comply with 2 C.F.R. § 200.336 and provide the Federal Agency administering the funds for which this Project is funded ("Federal Agency"), Inspectors General, the Comptroller General of the United States, and the State of California or any of their authorized representatives access, during normal business hours, to documents, papers, books and records which are directly pertinent to this contract for the purposes of making and responding to audits, examinations, excerpts, and transcriptions. The right also includes timely and reasonable access to the Designer's personnel for the purpose of interview and discussion related to the books and records.

(B) The Designer agrees to permit any of the foregoing parties to reproduce by any means whatsoever or to copy excerpts and transcriptions as reasonably needed.

(C) The Designer agrees to provide the Inspectors General, the Comptroller General of the United States, and the State of California or their authorized representatives access to construction or other work sites pertaining to the work being completed under the contract.

4. **REQUIRED CONTRACT PROVISIONS IN ACCORDANCE WITH APPENDIX II TO PART 200 – CONTRACT PROVISIONS FOR NON-FEDERAL ENTITY CONTRACTS UNDER FEDERAL AWARDS (2 C.F.R. § 200.326)**

(A) Appendix II to Part 200 (A); Appendix II to Part 200 (B): Remedies for Breach; Termination for Cause/Convenience. If the contract is in excess of $10,000 and the contract does not include provisions for both termination for cause and termination for convenience by the City, including the manner by which it will be effected and the basis for settlement, then the following termination clauses shall apply. If the contract is for more than the simplified acquisition threshold and does not provide for administrative, contractual, or legal remedies in instances where Contractor violates or breaches the terms of the contract, then the following termination clauses shall apply and have precedence over the contract.

(i) Termination for Convenience. The City may, by written notice to Designer, terminate this contract for convenience, in whole or in part, at any time by giving written notice to Designer of such termination, and specifying the effective date thereof ("Notice of Termination for Convenience"). If the termination is for the convenience of the City, the City shall compensate Designer for work or materials fully and adequately provided through the effective date of termination. No amount shall be paid for unperformed work or materials not provided, including anticipated profit. Designer shall provide documentation deemed adequate by the City to show the work actually completed or materials provided by Designer prior to the effective date of termination. This contract shall terminate on the effective date of the Notice of Termination.

(ii) Termination for Cause. If Designer fails to perform pursuant to the terms of this contract, the City shall provide written notice to Designer specifying the default ("Notice of Default"). If Designer does not cure such default within ten (10) calendar days of receipt of Notice of Default, the City may terminate this contract for cause. If Designer fails to cure a default as set forth above, the City may, by written notice to Designer, terminate this contract for cause, in whole or in part, and specifying the effective date thereof ("Notice of Termination for Cause"). If the termination is for cause, Designer shall be compensated for that portion of the work or materials provided which has been

fully and adequately completed and accepted by the City as of the date the City provides the Notice of Termination. In such case, the City shall have the right to take whatever steps it deems necessary to complete the project and correct Designer's deficiencies and charge the cost thereof to Designer, who shall be liable for the full cost of the City's corrective action, including reasonable overhead, profit and attorneys' fees.

(iii) Reimbursement; Damages. The City shall be entitled to reimbursement for any compensation paid in excess of work rendered or materials provided and shall be entitled to withhold compensation for defective work or other damages caused by Designer's performance of the work.

(iv) Additional Termination Provisions. Upon receipt of a Notice of Termination, either for cause or for convenience, Designer shall promptly discontinue the work unless the Notice directs to the contrary. Designer shall deliver to the City and transfer title (if necessary) to all provided materials and completed work, and work in progress including drafts, documents, plans, forms, maps, products, graphics, computer programs and reports. The rights and remedies of the parties provided in this Section are in addition to any other rights and remedies provided by law or under this contract. Designer acknowledges the City's right to terminate this contract with or without cause as provided in this Section, and hereby waives any and all claims for damages that might arise from the City's termination of this contract. The City shall not be liable for any costs other than the charges or portions thereof which are specified herein. Designer shall not be entitled to payment for unperformed work or materials not provided, and shall not be entitled to damages or compensation for termination of work or supply of materials. If City terminates this contract for cause, and it is later determined that the termination for cause was wrongful, the termination shall automatically be converted to and treated as a termination for convenience. In such event, Designer shall be entitled to receive only the amounts payable under this Section, and Designer specifically waives any claim for any other amounts or damages, including, but not limited to, any claim for consequential damages or lost profits. The rights and remedies of the City provided in this Section shall not be exclusive and are in addition to any other rights and remedies provided by law, equity or under this contract including, but not limited to, the right to specific performance.

(B) Appendix II to Part 200 (C) – Equal Employment Opportunity: Except as otherwise provided under 41 C.F.R. Part 60, Designer shall comply with the following equal opportunity clause, in accordance with Executive Order 11246 of September 24, 1965 entitled "Equal Employment Opportunity," as amended by Executive Order 11375 of October 13, 1967 and implementation regulations at 41 C.F.R. Chapter 60:

(i) Designer will not discriminate against any employee or applicant for employment because of race, color, religion, sex, or national origin. Designer will take affirmative action to insure that applicants are employed and that employees are treated equally during employment, without regard to race, color, religion, sex, or national origin. Such action shall include, but not be limited to, the following: employment upgrading, demotion, transfer, recruitment, or recruitment advertising; layoff or termination; rates of pay or other forms of compensation; and selection for training including apprenticeship. Designer agrees to post in conspicuous places, available

to employees and applicants for employment, notices to be provided by the City setting forth the provisions of this nondiscrimination clause.

(ii) Designer will, in all solicitations or advertisements for employees placed by or on behalf of Designer, state that all qualified applicants will receive consideration for employment without regard to their race, color, religion, sex, or national origin.

(iii) Designer will not discharge or in any other manner discriminate against any employee or applicant for employment because such employee or applicant has inquired about, discussed, or disclosed the compensation of the employee or applicant or another employee or applicant. This provision shall not apply to instances in which an employee who has access to the compensation information of other employees or applicants as a part of such employee's essential job functions discloses the compensation of such other employees or applicants to individuals who do not otherwise have access to such information, unless such disclosure is in response to a formal complaint or charge, in furtherance of an investigation, proceeding, hearing, or action, including an investigation conducted by the employer, or is consistent with Designer's legal duty to furnish information.

(iv) Designer will send to each labor union or representative of workers with which he has a collective bargaining agreement or other contract or understanding, a notice, to be provided by the agency contracting officer, advising the labor union or workers' representative of the contractor's commitments under Section 202 of Executive Order No. 11246 of September 24, 1965, and shall post copies of the notice in conspicuous places available to employees and applicants for employment.

(v) Designer will comply with all provisions of Executive Order 11246 of September 24, 1965, and of the rules, regulations, and relevant orders of the Secretary of Labor.

(vi) Designer will furnish all information and reports required by Executive Order No. 11246 of September 24, 1965, and by the rules, regulations, and orders of the Secretary of Labor, or pursuant thereto, and will permit access to his books, records, and accounts by the contracting agency and the Secretary of Labor for purposes of investigation to ascertain compliance with such rules, regulations, and orders.

(vii) In the event of Designer's noncompliance with the nondiscrimination clauses of this contract or with any of such rules, regulations, or orders, this contract may be cancelled, terminated or suspended in whole or in part and the contractor may be declared ineligible for further Government contracts in accordance with procedures authorized in Executive Order No.11246 of Sept. 24, 1965, and such other sanctions may be imposed and remedies invoked as provided in Executive Order No.11246 of September 24, 1965, or by rule, regulation, or order of the Secretary of Labor, or as otherwise provided by law.

(viii) Designer will include the provisions of paragraphs (i) through (viii) in every subcontract or purchase order unless exempted by rules, regulations, or orders of the Secretary of Labor issued pursuant to Section 204 of

Executive Order No. 11246 of September 24,1965, so that such provisions will *be* binding upon each subcontractor or vendor. Designer will take such action with respect to any subcontract or purchase order as may be directed by the Secretary of Labor as a means of enforcing such provisions including sanctions for noncompliance: *Provided, however,* that in the event Designer becomes involved in, or is threatened with, litigation with a subcontractor or vendor as a result of such direction, Designer may request the United States to enter into such litigation to protect the interests of the United States.

(C) Appendix II to Part 200 (D) – Davis-Bacon Act; Copeland Act: [Not Used. Does not apply to design professional services. 29 CFR § 5.2]

(D) Appendix II to Part 200 (E) – Contract Work Hours and Safety Standards Act:

(i) If this contract is in excess of $100,000 and involves the employment of mechanics or laborers, Designer shall comply with 40 U.S.C. 3702 and 3704, as supplemented by Department of Labor regulations (29 C.F.R. Part 5). Under 40 U.S.C. 3702, each contractor must be required to compute the wages of every mechanic and laborer on the basis of a standard work week of 40 hours. Work in excess of the standard work week is permissible provided that the worker is compensated at a rate of not less than one and a half times the basic rate of pay for all hours worked in excess of 40 hours in the work week. The requirements of 40 U.S.C. 3704 are applicable to construction work and provide that no laborer or mechanic must be required to work in surroundings or under working conditions which are unsanitary, hazardous or dangerous. These requirements do not apply to the purchases of supplies or materials or articles ordinarily available on the open market, or contracts for transportation or transmission of intelligence.

(ii) No contractor or subcontractor contracting for any part of the contract work which may require or involve the employment of laborers or mechanics shall require or permit any such laborer or mechanic in any workweek in which he or she is employed on such work to work in excess of forty hours in such workweek unless such laborer or mechanic receives compensation at a rate not less than one and one-half times the basic rate of pay for all hours worked in excess of forty hours in such workweek.

(iii) In the event of any violation of the clause set forth in paragraph (ii) of this section the contractor and any subcontractor responsible therefor shall be liable for the unpaid wages. In addition, such contractor and subcontractor shall be liable to the United States (in the case of work done under contract for the City of Columbia or a territory, to such City or to such territory), for liquidated damages. Such liquidated damages shall be computed with respect to each individual laborer or mechanic, including watchmen and guards, employed in violation of the clause set forth in paragraph (ii) of this section, in the sum of $10 for each calendar day on which such individual was required or permitted to work in excess of the standard workweek of forty hours without payment of the overtime wages required by the clause set forth in paragraph (ii) of this section.

(iv) The City shall upon its own action or upon written request of an authorized representative of the Department of Labor withhold or cause to be withheld,

from any moneys payable on account of work performed by the Designer or subcontractor under any such contract or any other Federal contract with the same prime contractor, or any other federally-assisted contract subject to the Contract Work Hours and Safety Standards Act, which is held by the same prime contractor, such sums as may be determined to be necessary to satisfy any liabilities of such contractor or subcontractor for unpaid wages and liquidated damages as provided in the clause set forth in paragraph (iii) of this section.

(v) The Designer or subcontractor shall insert in any subcontracts the clauses set forth in paragraph (ii) through (v) of this Section and also a clause requiring the subcontractors to include these clauses in any lower tier subcontracts. The Contractor shall be responsible for compliance by any subcontractor or lower tier subcontractor with the clauses set forth in paragraphs (ii) through (v) of this Section.

(E) Appendix II to Part 200 (F) – Rights to Inventions Made Under a Contract or Agreement:

(i) If the Federal award meets the definition of "funding agreement" under 37 C.F.R. § 401.2(a) and the non-Federal entity wishes to enter into a contract with a small business firm or nonprofit organization regarding the substitution of parties, assignment or performance of experimental, developmental, or research work under that "funding agreement," the non-Federal entity must comply with the requirements of 37 C.F.R. Part 401 (Rights to Inventions Made by Nonprofit Organizations and Small Business Firms Under Government Grants, Contracts and Cooperative Agreements), and any implementing regulations issued by the City.

(ii) The regulation at 37 C.F.R. § 401.2(a) currently defines "funding agreement" as any contract, grant, or cooperative agreement entered into between any Federal agency, other than the Tennessee Valley Authority, and any contractor for the performance of experimental, developmental, or research work funded in whole or in part by the Federal government. This term also includes any assignment, substitution of parties, or subcontract of any type entered into for the performance of experimental, developmental, or research work under a funding agreement as defined in the first sentence of this paragraph.

(F) Appendix II to Part 200 (G) – Clean Air Act and Federal Water Pollution Control Act: If this contract is in excess of $150,000, Designer shall comply with all applicable standards, orders, or requirements issued pursuant to the Clean Air Act (42 U.S.C. 7401-7671q) and the Federal Water Pollution Control Act as amended (33 U.S.C. 1251-1387).

(i) Pursuant to the Clean Air Act, (1) Designer agrees to comply with all applicable standards, orders or regulations issued pursuant to the Clean Air Act, as amended, 42 U.S.C. § 7401 et seq., (2) Designer agrees to report each violation to the City and understands and agrees that the City will, in turn, report each violation as required to assure notification to the Federal awarding agency and the appropriate Environmental Protection Agency Regional Office, and (3) Designer agrees to include these requirements in each subcontract exceeding $150,000.

(ii) Pursuant to the Federal Water Pollution Control Act, (1) Designer agrees to comply with all applicable standards, orders or regulations issued pursuant to the Federal Water Pollution Control Act, as amended, 33 U.S.C. 1251 et seq., (2) Designer agrees to report each violation to the City and understands and agrees that the City will, in turn, report each violation as required to assure notification to the Federal awarding agency and the appropriate Environmental Protection Agency Regional Office, and (3) Designer agrees to include these requirements in each subcontract exceeding $150,000.

(G) Appendix II to Part 200 (H) – Debarment and Suspension: A contract award (see 2 C.F.R. § 180.220) must not be made to parties listed on the government wide exclusions in the System for Award Management (SAM), in accordance with the OMB guidelines at 2 CFR 180 that implement Executive Orders 12549 (3 C.F.R. part 1986 Comp., p. 189) and 12689 (3 C.F.R. part 1989 Comp., p. 235), "Debarment and Suspension." SAM Exclusions contains the names of parties debarred, suspended, or otherwise excluded by agencies, as well as parties declared ineligible under statutory or regulatory authority other than Executive Order 12549.

(i) This contract is a covered transaction for purposes of 2 C.F.R. pt. 180 and 2 C.F.R. pt. 3000. As such Designer is required to verify that none of the Designer, its principals (defined at 2 C.F.R. § 180.995), or its affiliates (defined at 2 C.F.R. § 180.905) are excluded (defined at 2 C.F.R. § 180.940) or disqualified (defined at 2 C.F.R. § 180.935).

(ii) Designer must comply with 2 C.F.R. pt. 180, subpart C and 2 C.F.R. pt. 3000, subpart C and must include a requirement to comply with these regulations in any lower tier covered transaction it enters into.

(iii) This certification is a material representation of fact relied upon by City. If it is later determined that Designer did not comply with 2 C.F.R. pt. 180, subpart C and 2 C.F.R. pt. 3000, subpart C, in addition to remedies available to the City, the Federal Government may pursue available remedies, including but not limited to suspension and/or debarment.

(iv) Designer warrants that it is not debarred, suspended, or otherwise excluded from or ineligible for participation in any federal programs. Designer also agrees to verify that all subcontractors performing work under this contract are not debarred, disqualified, or otherwise prohibited from participation in accordance with the requirements above. Designer further agrees to notify the City in writing immediately if Designer or its subcontractors are not in compliance during the term of this contract.

(H) Appendix II to Part 200 (I) – Byrd Anti-Lobbying Act: If this contract is in excess of $100,000, Designer shall have submitted and filed the required certification pursuant to the Byrd Anti-Lobbying Amendment (31 U.S.C. § 1353). If at any time during the contract term funding exceeds $100,000.00, Designer shall file with the City the Federal Standard Form LLL titled "Disclosure Form to Report Lobbying." Designers that apply or bid for an award exceeding $100,000 must file the required certification. Each tier certifies to the tier above that it will not and has not used Federal appropriated funds to pay any person or organization for influencing or attempting to influence an officer or employee of any agency, a member of

Congress, officer or employee of Congress, or an employee of a member of Congress in connection with obtaining any Federal contract, grant or any other award covered by 31 U.S.C. 1352. Each tier must also disclose any lobbying with non-Federal funds that takes place in connection with obtaining any Federal award. Such disclosures are forwarded from tier to tier up to the recipient.

(I) Appendix II to Part 200 (J) – Procurement of Recovered Materials:

(i) Designer shall comply with section 6002 of the Solid Waste Disposal Act, as amended by the Resource Conservation and Recovery Act. The requirements of Section 6002 include procuring only items designated in guidelines of the Environmental Protection Agency (EPA) at 40 C.F.R. part 247 that contain the highest percentage of recovered materials practicable, consistent with maintaining a satisfactory level of competition, where the purchase price of the item exceeds $10,000 or the value of the quantity acquired during the preceding fiscal year exceeded $10,000; procuring solid waste management services in a manner that maximizes energy and resource recovery; and establishing an affirmative procurement.

(ii) In the performance of this contract, the Designer shall make maximum use of products containing recovered materials that are EPA-designated items unless the product cannot be acquired: Competitively within a timeframe providing for compliance with the contract performance schedule; Meeting contract performance requirements; or At a reasonable price.

(iii) Information about this requirement, along with the list of EPA-designate items, is available at EPA's Comprehensive Procurement Guidelines web site, https://www.epa.gov/smm/comprehensive-procurement-guideline-cpg-program.

5. **MISCELLANEOUS PROVISIONS**

(A) Designer acknowledges that 31 U.S.C. Chapter 38 (Administrative Remedies for False Claims and Statements) applies to the Designer's actions pertaining to this contract.

(B) The Federal Government is not a party to this contract and is not subject to any obligations or liabilities to the City, Designer, any subcontractors or any other party pertaining to any matter resulting from the contract.

(C) General and Administrative Expenses And Profit For Time And Materials Contracts/Amendments.

(i) General and administrative expenses shall be negotiated and must conform to the Cost Principles.

(ii) Profit shall be negotiated as a separate element of the cost. To establish a fair and reasonable profit, consideration must be given to the complexity of the work to be performed, the risk borne by the Designer, the Designer's investment, the amount of subcontracting, the quality of its record of past performance, and industry profit rates in the surrounding geographical area for similar work.

(iii) Any agreement, amendment or change order for work performed on a time and materials basis shall include a ceiling price that Designer exceeds at its own risk.

6. BUY AMERICA DOMESTIC PROCUREMENT PREFERENCE

As required by Section 70914 of the Bipartisan Infrastructure Law (also known as the Infrastructure Investment and Jobs Act), P.L. 117-58, on or after May 14, 2022, none of the funds under a federal award that are part of Federal financial assistance program for infrastructure may be obligated for a project unless all of the iron, steel, manufactured products, and construction materials used in the project are produced in the United States, unless subject to an approved waiver. The requirements of this section must be included in all subawards, including all contracts and purchase orders for work or products under this program.

Recipients of an award of Federal financial assistance are hereby notified that none of the funds provided under this award may be used for a project for infrastructure unless:

1. all iron and steel used in the project are produced in the United States--this means all manufacturing processes, from the initial melting stage through the application of coatings, occurred in the United States;

2. all manufactured products used in the project are produced in the United States—this means the manufactured product was manufactured in the United States; and the cost of the components of the manufactured product that are mined, produced, or manufactured in the United States is greater than 55 percent of the total cost of all components of the manufactured product, unless another standard for determining the minimum amount of domestic content of the manufactured product has been established under applicable law or regulation; and

3. all construction materials are manufactured in the United States—this means that all manufacturing processes for the construction material occurred in the United States.

The Buy America preference only applies to articles, materials, and supplies that are consumed in, incorporated into, or affixed to an infrastructure project. As such, it does not apply to tools, equipment, and supplies, such as temporary scaffolding, brought to the construction site and removed at or before the completion of the infrastructure project. Nor does a Buy America preference apply to equipment and furnishings, such as movable chairs, desks, and portable computer equipment, that are used at or within the finished infrastructure project but are not an integral part of the structure or permanently affixed to the infrastructure project.

For further information on the Buy America preference, please visit www.doi.gov/grants/BuyAmerica. Additional information can also be found at the White House Made in America Office website: www.whitehouse.gov/omb/management/made-in-america/.

Designer shall comply with all of City's obligations City's obligation with respect to Section 70914 of the Bipartisan Infrastructure Law as a Recipient of a award for Federal financial assistance in the performance of this Agreement as a condition of this Agreement.

7. ADDITIONAL TERMS.

a. The project will be subject to National Environmental Policy Act (NEPA) as well as the California Environmental Quality Act ("CEQA").

b. The project will be subject to Section 504 of the Rehabilitation Act and the Architectural Barriers Act Standards.

c. Plans, specifications, all contractor solicitation documentation and contract documents must be submitted to USDA Rural Development for review and concurrence.

d. The construction project may be subject to the Build America Buy American (BABA) requirements. If so, the following provisions should be considered during design and must be added to the bidding and construction contract documents:

i. Information for Designer: This contract is expected to be funded in whole or in part using funds from the Infrastructure Investment and Jobs Act. Section 70914 of the IIJA prohibits the use of these funds unless all iron, steel, and manufactured goods are produced in the United States. All iron and steel manufacturing processes must take place in the United States, except for metallurgical processes involving refinement of steel additives. There is no requirement for the origin of components and subcomponents of manufactured goods. Products listed at 48 CFR 25.104(a) have been determined to be unavailable in the United States and if required for the project may be purchased from foreign sources. No unauthorized use of foreign iron, steel, and/or manufactured goods will be allowed on this project. {The following waivers apply to this project:}

ii. Supplemental General Conditions: This contract is expected to be funded in whole or in part using funds from the IIJA. Section 70914 of the IIJA prohibits the use of these funds unless all iron, steel, and manufactured goods are produced in the United States. All iron and steel manufacturing processes must take place in the United States, except for metallurgical processes involving refinement of steel additives. There is no requirement for the origin of components and subcomponents of manufactured goods. Products listed at 48 CFR 25.104(a) have been determined to be unavailable in the United States and if required for the project may be purchased from foreign sources. No unauthorized use of foreign iron, steel, and/or manufactured goods will be allowed on this project. {The following waivers apply to this project:}

e. If the Project receives an Emergency Rural Healthcare Grant (ERHC), compliance with the prevailing wage requirements of the Davis-Bacon and Related Acts will be required for contractors and subcontractors performing construction. Before bidding, the general wage determination from the Department of Labor website (htpps://www.dol.gov) must be added to bid documents and all contracts covered by the Act must include the statement “The contractor must comply with the minimum rates for wages for laborers and mechanics as determined by the Secretary of Labor in accordance with the provisions of the Davis-Bacon and Related Acts.” Labor standards provisions from 29 CFR 5.5(a) must be included in every contract.

f.. If the existing building is classified as Historic, compliance with Section 106 of the National Historic Preservation Act of 1966 (NHPA) will be required.

EXHIBIT "B"

FEE

1. FEE SCHEDULE.

Designer will invoice City on a monthly cycle based on the following fee schedule. Designer will include with each invoice a detailed progress report that indicates the amount of budget spent on each phase and the total amount spent against the Total Compensation. Designer will inform City regarding any out-of-scope work being performed by Designer for which Designer intends to seek compensation from City.

City of Rolling Hills INCORPORATED JANUARY 24, 1957

Agenda Item No.: 13.A
Mtg. Date: 06/10/2024

TO: **HONORABLE MAYOR AND MEMBERS OF THE CITY COUNCIL**

FROM: **ROBERT SAMARIO, FINANCE DIRECTOR**

THRU: **KARINA BAÑALES, CITY MANAGER**

SUBJECT: **FISCAL YEAR 2023/24 THIRD QUARTER INTERIM FINANCIAL STATEMENTS FOR THE NINE MONTHS ENDED MARCH 31, 2024**

DATE: **June 10, 2024**

BACKGROUND:
Each quarter, City staff prepares an analysis of all fund revenues and expenditures to determine to what extent they align with expectations established through the current budget as amended. The result of this analysis is then presented to the City Council.

The analysis aims to identify any unexpected variances, particularly unfavorable ones, so that the City can take appropriate action. In addition, the analysis performed through March 2024 is instrumental in developing the revenue estimates contained in the adopted budget for the following fiscal year.

DISCUSSION:
Attachment A provides a detailed narrative analysis and discussion based on staff's analysis of revenues and expenditures in relation to the budgeted estimates and a discussion of General Fund reserves. The key findings are summarized below.

REVENUES

Property Taxes - As the City's largest revenue source, making up 48% of total General Fund revenues, tracking its progress is important throughout the fiscal year. Because property tax revenues are not received evenly during the fiscal year, staff evaluated revenues through March 31, 2024, totaling $856,542, against a seasonally adjusted budget using trends over the last three years. Based on the seasonally adjusted budget of $897,750, it appears revenues will end the fiscal year approximately $40,000 below budget.

Building Permits - Revenues through March 31, 2024, totaled $274,248. However, this represents only seven payments due to untimely payments from the County, which provides building services to the City by contract. Extrapolating from these results thus far, it appears revenues will reach approximately $470,000 by fiscal year-end, resulting in a shortfall of

approximately $130,000 in relation to the budgeted estimates.

EXPENDITURES

General Fund expenditures are well below the amended budget. Through March 31, 2024, operating expenditures totaled $1,624,224 against a prorated budget of $2,044,068, resulting in a savings of $419,844. The variance is due to many factors, and the key factors are explained in Attachment A.

FISCAL IMPACT:
None.

RECOMMENDATION:
Receive and file.

ATTACHMENTS:
Attachment A - CL_AGN_240610_CC_NarrativeAnalysis_FY23-24_Q3_Review.pdf
Attachment B - CL_AGN_240610_CC_GeneralFund_Revenues.pdf
Attachment C - CL_AGN_240610_CC_GeneralFund_Exp_ByDept.pdf
Attachment D - CL_AGN_240610_CC_GeneralFund_Exp_Detail.pdf
Attachment E - CL_AGN_240610_CC_Restricted_Funds.pdf
Attachment F - CL_AGN_240610_CC_GeneralFund_BudgetAmendments.pdf

CITY OF ROLLING HILLS
Fiscal Year 2023/2024
Third Quarter Review
Nine Months Ended March 31, 2024

OVERVIEW

The analysis below provides a comparison of actual revenues and expenditures to the amended budget through the nine months ended March 31, 2024. Although there are still another three months left in the fiscal year and the current trends can change, enough data is available to make reasonably good projections of how revenues and expenditures will end the year.

The largest and most important fund is the General Fund, which is where the traditional and ongoing services provided to the community are accounted for, including public safety, building/planning, emergency preparedness, and city administration.

However, the City has a number of other funds that account for other important activities, programs, and services. Most of these funds account for monies that are restricted to a specific purpose and, therefore, are required to be accounted for separately. The City also accounts for large capital projects separately, including projects funded from federal and state grants. Lastly, the City provides refuse collection and disposal services by contract. This operation is accounted for in an enterprise fund.

Each of the City's funds are discussed below in the context of the mid-year review.

GENERAL FUND

General Fund Revenues

A summary of General Fund revenues is provided in the table below, which shows that the adopted fiscal year 2023/24 revenues total $2,762,294. Staff has added a column for the "pro-rated" budget through March 31, 2024, which represents 75% (9 out of 12 months) of the annual budget to enable a more meaningful comparison to revenues realized through nine months of the fiscal year. The only exception is property taxes, which do not come in evenly throughout the year. Over the last three fiscal years, revenues through March 31, 2024, averaged 60% of the annual total realized. As such, the pro-rated budget has been "seasonally adjusted" by using 60% of the adopted budget to compare to actuals through March 31, 2024.

Through March 31, 2024, revenues from all sources totaled $1,847,283, resulting in an ***unfavorable*** variance of $245,329. An analysis of each key revenue is provided below.

Budget Vs Actual Through March 31, 2024
General Fund Revenues

	Adopted Budget	Pro-Rata Budget		Actuals Thru 03/31/24	Variance Favorable (Unfavorable)
401 Property Taxes	$ 1,496,250	$ 897,750	*	$ 856,532	$ (41,218)
405 Sales Taxes	13,905	10,429		9,497	(932)
410 Property Transfer Tax	56,222	42,166		42,333	167
415 Other Taxes	1,000	750		-	(750)
420 Motor Vehicle In Lieu	269,267	201,951		138,334	(63,617)
440 Building & Other Permits	600,000	450,000		274,248	(175,752)
441 C&D Permits	5,600	4,200		6,100	1,900
450 Variance, Planning & Zoning	67,000	50,250		19,642	(30,608)
455 Animal Control Fees	150	113		343	231
460 Franchise Fees	13,000	9,750		7,651	(2,100)
480 Fines & Traffic Violations	3,500	2,625		4,300	1,675
482 Cost Recoivery - Publications	7,200	5,400		3,000	(2,400)
600 RHCA Lease Revenue	69,000	51,750		51,743	(7)
650 Public Safety Aug Fund	1,200	900		848	(52)
670 Interest on Investments	110,000	82,500		125,099	42,599
671 PARS Earnings	20,000	15,000		38,730	23,730
675 Miscellaneous Revenue	5,000	3,750		5,556	1,806
699 Transfers In - Refuse Fund	24,000	18,000		18,000	-
TOTALS	**$ 2,762,294**	**$ 1,847,283**		**$1,601,954**	**$ (245,329)**

***** Seasonally adjusted budget at 3/31/24

Property Taxes. By far, the largest General Fund revenue is from property taxes, representing 54% of total adopted revenues. At March 31, 2024, property tax revenues totaled $856,532. This is $41,218, below the seasonally adjusted budget of $897,720. This unfavorable variance is likely due to the fact that the adopted revenue budget was built upon an estimate of fiscal year 2022/23 revenues, which, in the end, came in below the year-end projection. Thus, the revenue budget for property taxes may be slightly high, and we may end the fiscal year slightly below budget even though the projected growth of 5% may be realized.

It is important to note, however, that there are a couple of headwinds that will likely revenues in the next two years, both of which are tied to the impact of higher interest rates. Starting in March of 2022, the Federal Reserve made its first of eleven increases to short-term interest rates over a sixteen-month period totaling 5.25%. This is the sharpest increase in rates since the 1980s, affecting mortgage and other borrowing rates.

One of the effects of higher interest rates was the dramatic decline in home sales. For Los Angeles County, the decline was nearly 40%. In terms of its impact on property taxes, one of the immediate impacts is on supplemental tax revenues that may come in this fiscal year. Supplemental taxes are assessed when real estate is sold after the levy date in January. The assessed value of the property sold is reassessed to the sales price, which almost always exceeds the Proposition 13 assessed value. This results in a supplemental tax bill that is paid by the new owner. The more sales volume that occurs, the greater the overall supplemental taxes that are collected and allocated to local jurisdictions. Generally speaking, most of the supplemental taxes

are received by the City in the second half of the fiscal year. However, the City has collected $18,406 through March 31, 2024, which is $5,183 (22%) below prior year revenues through the third of the year. In total, the City received approximately $39,000 in supplemental taxes last fiscal year, so a 21% decline for the year, if the current trend holds, would amount to roughly $8,179.

The long-term impact, which affects growth in property taxes starting next fiscal year, is on the overall increase in assessed values, which drives the growth in property taxes received by the City. When properties are sold, the County reassesses the property to the market value represented by the sales price. Oftentimes, particularly in older communities, the increase in assessed value is substantial. Going forward, the annual property taxes are much higher as a result. When sales volumes are high, as they were prior to the recent rate hikes, this drives property tax growth well beyond the annual 2% CPI increases to assessed values established by Proposition 13. Over the last decade, the reassessment of properties sold generated an additional 3-4% of growth for an overall growth of 5-6%. However, with the sharp decline in sales, the City can expect to see a more muted growth starting next fiscal year – probably in the 3% to 3.5% range.

Real Property Transfer Tax (RPTT). The significant decline in home sales caused by rising interest rates has more directly affected RPPT revenues. Because the RPTT is assessed at the time a home is sold or otherwise changes title, a decline in home sales will directly and immediately affect RPPT revenues, which are received monthly.

RPTT peaked in fiscal year 2021 at approximately $133,000 but has declined since then, as evidenced by the current year's budget of $56,222. Through March 31, 2024, revenues are at $42,333 and in line with the pro-rated budget, suggesting that revenues may have at least stabilized.

Building and Other Permits. Revenues from this category are the General Fund's second-largest revenue, with budgeted revenues of $600,000. Last fiscal year, revenues hit a 4-year high of approximately $640,000, driven by increasing building activity buoyed by favorable interest rates. However, as with property taxes and real property transfer taxes, increases in interest rates tend to affect building/development activity due to the increased costs of borrowing. We did not see the expected impact on building revenues last fiscal year; however, we have seen a significant reduction in revenues relative to budgeted/estimated revenues nine months into the fiscal year. At March 31, 2024, Building and Other Permit revenues were $274,248 versus a pro-rated budget of $450,000. However, because the remittances from the County are usually sixty days behind, the revenues through March mid-year only reflect seven months of revenues. Extrapolating for nine months, revenues would be approximately $350,000, which is still below expectations. In fiscal year 2022/23, a total of 155 permits were issued by the County on our behalf. This year, through December 31, 2023, only 60 permits have been issued, which equates to 120 for the entire fiscal year. Although we will continue to monitor these revenues through fiscal year-end, it appears revenues could end the year $150,000 below the $600,000 budget.

Interest on Investments. Excluding the funds held in the Section 115 Pension Trust, interest revenues through March 31, 2024, totaled $125,099 versus the pro-rated budget of $82,500. Revenues have been higher in the last two years for two reasons. First and foremost, over $1M has been shifted from Local Agency Investment Fund (LAIF) to CDs to capitalize on higher interest rates offered in the 3-month to 9-month window. For most of the current fiscal year, interest rates on the short end have been higher than the long end (referred to as an inverse yield curve). As a result, staff has moved more money into short-term CDs, which has yielded higher earnings. The second reason is that, generally, interest rates have increased after more than a decade of historically low-interest rates.

Interest earnings from the funds held in the City's Section 115 pension trust are also higher than expected. Through March 31, 2024, interest earnings total $38,730 versus a pro-rated budget of $15,000.

General Fund Expenditures

The originally adopted budget for fiscal year 2023/24 totaled $2,805,457, which included $250,000 in capital transfers, leaving an operating budget of $2,555,457. The amended budget includes appropriation carryovers and budget amendments approved between July 1 and March 31, 2024, and totals $4,386,238, of which $1,660,814 is for one-time capital transfers.

Excluding capital transfers, expenditures through March 31, 2024, totaled $1,624,224, resulting in a favorable variance of $431,683. A discussion of the key variances at the department level is provided below.

CITY OF ROLLING HILLS
General Fund Expenditures by Department
Budget Vs. Actual
Nine Months Ended March 31, 2024

Department	Adopted Budget	Amended Budget	Pro-Rated Budget	Actuals Thru 03/31/24	Variance Favorable (Unfav)
City Administrator	$ 957,138	$ 1,063,827	$ 797,870	$ 553,971	$ 243,900
Finance	154,400	154,400	115,800	120,413	(4,613)
Planning & Development	858,801	858,801	644,101	488,726	155,374
Public Safety	270,000	317,578	238,184	200,819	37,365
Non-Departmental	134,018	141,618	106,214	139,461	(33,247)
City Properties	181,100	189,200	141,900	120,834	21,066
Total Operations	**2,555,457**	**2,725,424**	**2,044,068**	**1,624,224**	**419,844**
Capital Transfers	250,000	1,660,814	1,245,610	198,862	1,046,748
GENERAL FUND TOTALS	**$ 2,805,457**	**$ 4,386,238**	**$ 3,289,679**	**$ 1,823,086**	**$1,466,593**

- **City Administrator/Manager Department**

The $243,900 favorable variance was the result of underspending in three areas: (1) Approximately $99,000 is attributable to salary and benefit savings from staff vacancies. During the first half of the fiscal year, there were vacancies in 3 of the 4 positions accounted for in the City Manager's Department; (2) Consulting fees (account 890) were approximately $47,000 below budget. This account includes project management costs performed by contract. Because most of the work is tied to capital projects accounted for in the Capital Improvement Fund (40), the costs have been charged directly to those projects rather than to this account. As a result, we expect to see savings in this account throughout the fiscal year; and (3) the work performed by a contractor to digitize City records, captured in account 891 have not been billed as of March 31, 2024, resulting in a budgeted variance of almost $31,000.

- **Planning Department**

Overall, expenditures are $155,374 below the pro-rated budget of $644,101. A discussion of the largest contributors to the favorable variance is provided below.

872 - Property Development – Legal Expenses ($16,246). This account is for amounts paid to the City's contracted attorney for any support associated with planning. The need for legal support varies from year to year and month to month. Thus, a variance from budget during the year is not unusual.

875 - Willdan Building and 878 - Building Inspection L.A. County. These accounts are for the cost of building and plan check services provided by contract. Most applicants utilize the County Public Works Department for building services. A smaller number utilize Willdan Engineering Group who provides expedited, but more expensive, services. We have seen more applicants utilizing Willdan recently versus the County, which explains the higher costs associated with account 875. In addition, LA County is usually two months in arrears in its bills sent to the City, which to a large extent explains the seemingly low expenditures in account 878.

881 - Stormwater Management. This account is for costs incurred to reduce stormwater runoff and pollutants reaching the ocean. Many costs incurred by the City are charged to the Measure W Fund, for which revenues from the Clean Water Act are accounted. However, there are limits to how much can be charged, and the final allocation of costs cannot be done until the end of the year. As such, the variance at March 31, 2024, of $17,939 may or may not continue through fiscal year end.

884 – Special Project Study & Consulting. Historically, this account has been used to capture costs related to the Housing Element in addition to payments to the City Arborist. With the completion of the Housing Element, the ongoing budget of $20,000 ($15,000 pro-rated) is

solely for the City Arborist. Through the first nine months of the fiscal year, no costs were incurred. The nature of the contract is "on-call", meaning, costs are incurred if and only services are needed.

- **Public Safety**

  833 – Other Law Enforcement Expenses. On an ongoing basis, this account is used to track costs for school security reimbursement, and the monthly ALPR camera connectivity. However, in March 2024 the City Council amended the budget for a total of approximately $35,000 for the one-time purchase of equipment related to the Auto License Plate Recognition Program and the LIDAR/RADAR Speed Detection Device. As of March 31, 2024, the City has not paid for this equipment, explaining the $28,215 variance.

- **Non-Departmental**

  The "Non-Departmental" department accounts for costs that do not fit into a traditional department and generally are of a Citywide nature. The table below shows the accounts that are included within this department and the status of expenditures relative to budget at December 31, 2023.

  There is one account that has an unfavorable variance - Insurance & Bond Expense (895). The unfavorable variance is simply a timing variance due to the fact that premiums are paid in July of each year.

Status of Reserves

Based on unaudited numbers, General Fund reserves at June 30, 2023 totaled $4,633,046. However, through March 31, 2024, a total of $1,041,310 in amendments to the General Fund budget has been approved by Council that draw upon reserves. The vast majority of the amendments are tied ted to one-time costs. In addition, the adopted fiscal year 2023/24 budget included the use of reserves for capital in the amount of $43,163. As a result, the available balance is currently $3,548,573. Of this total, $2,650,498 is set aside for emergencies, such as natural disasters, pursuant to the City's adopted reserve policy. This leaves $898,075 available for discretionary one-time costs. Please refer to Attachment 6 for a summary of approved budget amendments and calculation of available reserves.

RESTRICTED FUNDS

Transit/Transportation Funds

The City receives revenues, primarily from the County, that are restricted for specific purposes. These include the allocation of special sales tax measures approved by Los Angeles County voters over the last several decades that are restricted to transit and transportation programs and

projects. The measures include Proposition A, Proposition C, Measure R, and Measure M. Since the City of Rolling Hills does not own and operate a transit system and, in fact, has no transit service provided within the City limits, nor does the City own and maintain any public roads, the funds received pursuant to the four tax measures are either gifted to other agencies or exchanged for unrestricted monies with other agencies that can utilize the funds in accordance with their intended uses.

Revenues received within these transit/transportation funds through March 31, 2024, total $81,602, which are $21,074 below expectations. However, only eight payments for each of the four revenues have been received. Adjusting for this, the true shortfall so far is approximately $11,000. Staff will continue to monitor these revenues through the remainder of the fiscal year.

Citizens Option for Public Safety (COPS) Fund

The City also maintains a COPs Fund for monies received from the County's Supplemental Law Enforcement Services Fund, created in 2009 through an increase statewide to vehicle license fees. The revenues can only be used for supplemental law enforcement services.

Total revenues through March 31 are $186,254 versus the budget of $165,000. Revenues are normally received in their entirety by mid-year. The higher than expected revenue total is the result of a one-time payment of $17,248 for prior year under-allocations from the State of California.

On the expenditure side, allocated costs for supplemental law enforcement services totaled $87,904 through March due to delayed billings from LA County.

Measure W Fund

The City receives an allocation of the countywide special parcel tax pursuant to Measure W (Safe, Clean Water Act) for parcels located within the Los Angeles County Flood Control District. These revenues are intended for storm water recycling and water quality improvement projects and programs. The City receives a single payment each year for the full annual allocation. In January 2024, the City received approximately $103,765, which is very close to the $105,000 budget.

Actual costs will not be known until year end and discussed previously in the context of Stormwater costs charged to the General Fund.

ENTERPRISE FUND

Refuse Fund

The Refuse Fund is the City's only enterprise fund. Enterprise funds are typically used to account for utilities owned and operated by governments, such as water, wastewater, electricity, and refuse, and other operations that are similar to those provided by the private sector, such as airports and golf courses.

The Refuse Fund accounts for the contracted waste collection and disposal for all City of Rolling Hills residents. The fees charged to City residents are processed as a "Direct Assessment" through the County Assessor's Office, which means the annual total is added to the property tax bill sent to property owners by the County and is payable in two installments. Thus, the payments the City receives from the County for refuse services coincide with the payments we receive for regular property taxes.

After several years of subsidized rates via the General Fund, rates for refuse services were calculated to fully recover the contracted cost of services, which will total approximately $981,336 for this fiscal year. Through March, half of the costs have been incurred since the City only receives two invoices – one in December and the second in June. Ultimately, costs will line up with the budget. Revenues, budgeted at $1,005,336, are intended to cover the $981,336 to be paid to the refuse contractor plus $24,000 paid by the General Fund for administrative support. Through March, revenues are $634,241. However, based on the two payments received from the County for April and May, revenues should also line up with expectations at fiscal year-end.

Budget Vs Actual Through March 31, 2024
General Fund Revenues

	Adopted Budget	Pro-Rata Budget		Actuals Thru 03/31/24	Variance Favorable (Unfavorable)
401 Property Taxes	$ 1,496,250	$ 897,750	*	$ 856,532	$ (41,218)
405 Sales Taxes	13,905	10,429		9,497	(932)
410 Property Transfer Tax	56,222	42,166		42,333	167
415 Other Taxes	1,000	750		-	(750)
420 Motor Vehicle In Lieu	269,267	201,951		138,334	(63,617)
440 Building & Other Permits	600,000	450,000		274,248	(175,752)
441 C&D Permits	5,600	4,200		6,100	1,900
450 Variance, Planning & Zoning	67,000	50,250		19,642	(30,608)
455 Animal Control Fees	150	113		343	231
460 Franchise Fees	13,000	9,750		7,651	(2,100)
480 Fines & Traffic Violations	3,500	2,625		4,300	1,675
482 Cost Recoivery - Publications	7,200	5,400		3,000	(2,400)
600 RHCA Lease Revenue	69,000	51,750		51,743	(7)
650 Public Safety Aug Fund	1,200	900		848	(52)
670 Interest on Investments	110,000	82,500		125,099	42,599
671 PARS Earnings	20,000	15,000		38,730	23,730
675 Miscellaneous Revenue	5,000	3,750		5,556	1,806
699 Transfers In - Refuse Fund	24,000	18,000		18,000	-
TOTALS	**$ 2,762,294**	**$ 1,847,283**		**$ 1,601,954**	**$ (245,329)**

***** Seasonally adjusted budget at 3/31/24

CITY OF ROLLING HILLS
General Fund Expenditures by Department
Budget Vs. Actual
Nine Months Ended March 31, 2024

Department	Adopted Budget	Amended Budget	Pro-Rated Budget	Actuals Thru 03/31/24	Variance Favorable (Unfav)
City Administrator	$ 957,138	$ 1,063,827	$ 797,870	$ 553,971	$ 243,900
Finance	154,400	154,400	115,800	120,413	(4,613)
Planning & Development	858,801	858,801	644,101	488,726	155,374
Public Safety	270,000	317,578	238,184	200,819	37,365
Non-Departmental	134,018	141,618	106,214	139,461	(33,247)
City Properties	181,100	189,200	141,900	120,834	21,066
Total Operations	**2,555,457**	**2,725,424**	**2,044,068**	**1,624,224**	**419,844**
Capital Transfers	250,000	1,660,814	1,245,610	198,862	1,046,748
GENERAL FUND TOTALS	**$ 2,805,457**	**$ 4,386,238**	**$ 3,289,679**	**$ 1,823,086**	**$ 1,466,593**

CITY OF ROLLING HILLS
GENERAL FUND EXPENDITURES
Nine Months Ended March 31, 2024

Department/Object Account		Amended Budget	Pro-Rated Budget	Actuals Thru 3/31/24	Variance Favorable (Unfav)
01 - CITY ADMINISTRATOR					
702	Salaries -Full Time	$ 505,294	$ 378,971	$ 269,254	$ 109,717
705	Temporary Salaries	7,000	5,250	22,476	(17,226)
710	Retirement CalPERS-Employer	46,935	35,201	9,316	25,885
712	CalPERS Unfunded Liability	-	-	62,424	(62,424)
715	Workers Compensation Insurance	9,100	6,825	6,825	0
716	Group Insurance	72,907	54,680	28,439	26,241
717	Retiree Medical	37,500	28,125	21,471	6,654
718	Employer Payroll Taxes	39,401	29,551	19,294	10,257
719	Deferred Compensation	4,718	3,539	317	3,221
720	Auto Allowance	4,800	3,600	1,389	2,211
721	Phone Allowance	2,520	1,890	929	961
740	Office Supplies	13,000	9,750	6,874	2,876
745	Equipment Leasing Costs	11,000	8,250	3,203	5,047
750	Dues & Subscriptions	14,240	10,680	6,595	4,085
755	Conference Expense	1,873	1,405	50	1,355
757	Meetings Expense	2,000	1,500	1,130	370
759	Training & Education	5,000	3,750	-	3,750
761	Auto Mileage	500	375	236	139
765	Postage	21,000	15,750	5,596	10,154
775	City Council Expense	5,000	3,750	5,631	(1,881)
776	Miscellaneous Expenses	4,750	3,563	133	3,430
780	Comm./Newsletters & Outreach	5,000	3,750	-	3,750
785	Codification	3,000	2,250	1,518	732
790	Advertising	2,400	1,800	1,600	200
795	Other Gen Admin Expense	2,500	1,875	1,978	(103)
801	City Attorney	90,000	67,500	33,535	33,965
802	Legal Expense - Other	3,000	2,250	13,761	(11,511)
820	Website	6,000	4,500	58	4,442
890	Consulting Fees	101,895	76,421	29,640	46,781
891	Records Management	41,494	31,121	300	30,821
	Total City Administrator	**1,063,827**	**797,870**	**553,971**	**243,900**

CITY OF ROLLING HILLS
GENERAL FUND EXPENDITURES
Nine Months Ended March 31, 2024

Department/Object Account	Amended Budget	Pro-Rated Budget	Actuals Thru 3/31/24	Variance Favorable (Unfav)
05 - FINANCE				
740 Office Supplies				
750 Dues & Subscriptions	3,000	2,250	2,701	(451)
810 Annual Audit	31,400	23,550	20,725	2,825
890 Consulting Fees	120,000	90,000	96,988	(6,988)
Total Finance	**154,400**	**115,800**	**120,413**	**(4,613)**
15- PLANNING & DEVELOPMENT				
702 Salaries	212,515	159,386	153,457	5,929
703 Salaries - Part-Time	27,610	20,708	4,856	15,852
710 Retirement CalPERS-Employer	16,750	12,563	10,300	2,262
715 Workers Comp. Insurance	3,900	2,925	2,925	-
716 Group Insurance	42,669	32,002	24,725	7,277
718 Employer Payroll Taxes	18,527	13,895	11,927	1,969
719 Deferred Comp	865	649	317	331
720 Auto Allowance	1,200	900	900	-
721 Phone Allowance	600	450	450	-
761 Auto Mileage	300	225	-	225
750 Dues & Subscription	5,500	4,125	926	3,199
755 Conference Expense	385	289	1,782	(1,493)
759 Training & Education	1,000	750	-	750
776 Miscellaneous Expenses	-	-	1,166	(1,166)
790 Publication/Advertising/Noticing	15,000	11,250	5,568	5,683
802 Legal Expenses-Other	10,000	7,500	10,474	(2,974)
872 Property Development-Legal Exp	50,000	37,500	21,254	16,246
875 Willdan Building	30,000	22,500	27,955	(5,455)
878 Build Inspect. LA County	250,000	187,500	118,796	68,704
881 Storm Water Management	84,100	63,075	45,137	17,939
884 Special Project Study & Consult.	20,000	15,000		15,000
886 Code Enforcement	62,880	47,160	42,519	4,642
890 Consulting Fees (Onward)	-	-	-	-
928 Traffic Engineering	5,000	3,750	3,294	456
Total Planning & Development	**858,801**	**644,101**	**488,726**	**155,374**

CITY OF ROLLING HILLS
GENERAL FUND EXPENDITURES
Nine Months Ended March 31, 2024

Department/Object Account	Amended Budget	Pro-Rated Budget	Actuals Thru 3/31/24	Variance Favorable (Unfav)
25 - PUBLIC SAFETY				
830 Law Enforcement	255,000	191,250	188,899	2,351
833 Other Law Enforcement Exp	39,078	29,309	1,093	28,215
837 Wild Life Mgmt & Pest Control	18,500	13,875	6,670	7,205
838 Animal Control Expense	5,000	3,750	4,156	(406)
Total Public Safety	**317,578**	**238,184**	**200,819**	**37,365**
65 - NON-DEPARTMENTAL				
895 Insurance & Bond Expense	37,018	27,764	68,028	(40,265)
901 South Bay Comm. Organization	17,600	13,200	5,321	7,879
915 Community Recognition	10,000	7,500	7,599	(99)
917 Emergency Preparedness	77,000	57,750	58,513	(763)
Total Non-Departmental	**141,618**	**106,214**	**139,461**	**(33,247)**
75 - CITY PROPERTIES				
892 IT Services	61,200	45,900	46,405	(505)
893 Granicus Services	8,300	6,225	8,143	(1,918)
894 Computer Hardware Fund	5,000	3,750	-	3,750
925 Utilities	60,000	45,000	42,261	2,739
930 Repairs & Maintenance	16,000	12,000	10,843	1,157
931 Area Maintenance	-	-	1,344	(1,344)
932 Area Landscaping	23,700	17,775	11,839	5,936
946 Buildings & Equipment	15,000	11,250	-	11,250
Total City Properties	**189,200**	**141,900**	**120,834**	**21,066**
TOTALS BEFORE TRANSFERS	**2,725,424**	**2,044,068**	**1,624,224**	**419,844**
OPERATING TRANSFERS OUT				
999 Capital Grants Fund (16)	628,381	471,285	-	471,285
999 Capital Impr Fund (Fund 40)	1,032,433	774,325	198,862	575,463
Total Transfers Out	**1,660,814**	**1,245,610**	**198,862**	**1,046,748**
GENERAL FUND TOTAL	**$ 4,386,238**	**$ 3,289,679**	**$ 1,823,086**	**$ 1,466,593**

CITY OF ROLLING HILLS
Status of Revenues and Expenditures
Restricted, Capital, and Refuse Funds
Nine Months Ended March 31, 2024

		Amended Budget	Pro-Rated Budget	Actuals 3/31/24	Variance Fav (Unfav)
10 - COPS FUND					
	Revenues				
570	COPS Allocation	$ 165,000	$ 123,750	$ 186,254	$ 62,504
	Expenditures				
840	COPS Program Expenditures	165,000	$ 123,750	87,904	(35,846)
	Revenues Over (Under) Expenditures	$ -	$ -	$ 98,350	$ 98,350
16 - CAPITAL GRANT FUND					
	Revenues				
588	Crest Road FEMA Grant - 4434-526-112R	$ 1,135,337	$ 851,503	$ -	$ (851,503)
589	Safety Element Disaster Grants - DR 4344 PL0521	-	-	-	-
590	Veg. Mgmnt FEMA Grant - HMGP-4382-175-13R	172,215	129,161	-	(129,161)
591	Eastfield U/Grounding FEMA DR-4382-177-7R-CA	1,951,059	1,463,294	-	(1,463,294)
699	Transfers In - General Fund - Safety Element	-	-	-	-
699	Transfers In - Utility Fund - Crest Rd 4434-526-112R	381,819	286,364	-	(286,364)
699	Transfers In - Gen Fund - Crest Rd 4344-526-112R	-	-	-	-
699	Transfers In - Gen Fund - Eastfiled DR4382-177-7R	-	-	-	-
699	Transfers In - Utility Fund - Eastfiled DR4382-177-7R	657,294	492,971	-	(492,971)
699	Transfers In - General Fund - HMGP-4382-175-13R	51,311	38,483	-	(38,483)
	Total Revenues	4,349,035	3,261,776	-	(3,261,776)
			-		
	Expenditures		-		
957	Crest Road East Project - 4434-526-112R	1,301,109	975,832	45,898	929,934
958	Safety Element DR4344-PL0521	219,189	164,392	-	164,392
959	Veg. Mgmt Mitig. Proj. - HMGP-4382-175-13R	-	-	1,595	(1,595)
960	Eastfield Drive Utility U.G. - 4382-177-7R	2,581,945	1,936,459	-	1,936,459
	Total Expenditures	4,102,243	3,076,682	47,493	3,029,189
	Revenues Over (Under) Expenditures	$ 246,792	$ 185,094	$ (47,493)	$ (232,587)
22 - TDA FUND					
	Revenues				
509	TDA Grant Revenues	$ -	$ -	$ 5,000	$ 5,000
	Expenditures				
XXX	TDA Expenditures	-	$ -	-	-
		$ -	$ -	$ 5,000	$ 5,000
25 - PROPOSITION A FUND					
	Revenues				
500	Grant Revenues	$ 52,000	$ 39,000	$ 34,129	$ (4,871)
670	Interest Earned	300	225	-	33,904
	Total Revenues	52,300	39,225	34,129	29,032
	Expenditures				
620	Prop A Exchange	-	-	-	-
	Revenues Over (Under) Expenditures	$ 52,300	$ 39,225	$ 34,129	$ 29,032

		Amended Budget	Pro-Rated Budget	Actuals 3/31/24	Variance Fav (Unfav)
26 - PROPOSITION C					
	Revenues				
501	Grant Revenue-Prop C	$ 43,000	$ 32,250	$ 28,318	$ (3,932)
670	Interest Earned	250	188	-	28,130
	Total Revenues	43,250	32,438	28,318	24,198
	Expenditures				
906	Prop C Gifted	-	-	-	-
	Revenues Over (Under) Expenditures	$ 43,250	$ 32,438	$ 28,318	$ 24,198
27- MEASURE R TRANSIT					
	Revenues				
502	Measure R Grant Revenues	$ 33,000	$ 24,750	$ 18,904	$ (5,846)
670	Interest Earned	250	188	-	18,717
	Total Revenues	33,250	24,938	18,904	12,871
	Expenditures				
907	Measure R Gifted	-	-	-	-
	Revenues Over (Under) Expenditures	$ 33,250	$ 24,938	$ 18,904	$ 12,871
29 - MEASURE M					
	Revenues				
507	Measure M Local Return	$ 37,000	$ 27,750	$ 21,325	$ (6,425)
670	Interest Earned	250	188	-	21,138
	Total Revenues	37,250	27,938	21,325	14,713
	Expenditures				
XXX	Measure M Gifted	-	-	-	-
	Revenues Over (Under) Expenditures	$ 37,250	$ 27,938	$ 21,325	$ 14,713
30 - MEASURE W					
	Revenues				
508	Grant Revenues	$ 105,000	$ 78,750	$ 103,765	$ 25,015
670	Interest Earned	500	375	-	375
	Total Revenues	105,500	79,125	103,765	25,390
	Expenditures				
913	Storm Water Management - 30%	31,650	23,738	-	23,738
914	Storm Water Management - 70%	73,850	55,388	44,092	11,295
		105,500	79,125	44,092	35,033
	Revenues Over (Under) Expenditures	$ -	$ -	$ 59,673	$ (9,643)
40 - CAPITAL PROJECTS FUND					
	Revenues				
	Transfers from General Fund	$ 1,031,442	$ 773,582	$ 198,862	$ (574,720)
		1,031,442	773,582	198,862	(574,720)
	Expenditures				
887	Sewer Feasibility Project	9,010	6,758	8,978	2,220
890	Consulting Fees	21,100	15,825	-	(15,825)

		Amended Budget	Pro-Rated Budget	Actuals 3/31/24	Variance Fav (Unfav)
899	Outdoor Siren System - Design & Constr	293,220	219,915	131,449	(88,466)
934	Equestrian Fence Replacement	26,725	20,043	19,295	
935	Tennis Court Improvenments	307,000	230,250	6,848	(223,403)
947	Non-Building Improvements	-	-	-	-
948	City Hall Improvements	19,456	14,592	7,590	(7,002)
949	Battery/Solar Back-Up	250,000	187,500	-	(187,500)
961	Middleridge Road Emergency Storm Drain Repairs	71,173	53,380	-	(53,380)
962	Phase 1 Bifurcated 8" Sewer Main Engineering	22,598	16,949	908	(16,041)
963	Generator & Waterproof Removal and Electrical Svcs	6,994	5,246	-	(5,246)
964	HVAC Replacement Project	30,892	23,169	23,796	627
	Total Expenditures	1,058,168	793,626	198,862	(594,015)
	Revenues Over (Under) Expenditures	$ (26,726)	$ (20,044)	$ (0)	$ 19,296
50 - REFUSE FUND					
	Revenues				
665	Service Charges	$ 1,005,336	$ 754,002	$ 634,241	$ (119,761)
699	Transfers In - General Fund	-	-	-	-
	Total Revenues	1,005,336	754,002	634,241	(119,761)
	Expenditures				
815	Refuse Service Contract	981,336	736,002	490,498	(245,504)
790	Advertising	-	-		-
999	Transfers Out	24,000	18,000	18,000	-
	Total Expenditures	1,005,336	754,002	508,498	(245,504)
	Revenues Over (Under) Expenditures	$ -	$ -	$ 125,743	$ 125,743

CITY OF ROLLING HILLS
Summary of Budget Adjustments
Nine Months Ended March 31, 2024

	Res. No.	Date	Description	Amount	Type	Account Number
Budgeted Surplus (Deficit)				$ (43,163.00)		
FY 2023/24 Amendments						
Alan Palermo - Project Management	1343	07/10/2023	Transfer from GF to CIP Fund	21,100.00	One-Time	01-00-999
Tennis Court Improvements	1344	07/10/2023	Transfer from GF to CIP Fund	307,000.00	One-Time	01-00-999
Grant Writing Services	1345	07/10/2023	Sub-Appl for Fire Fuel Abatement	30,470.00	One-Time	01-01-890
AC Pros City Hall HVAC Repl Project	1347	08/28/2023	Transfer from GF to CIP Fund	30,892.20	One-Time	01-00-999
Community Organizations	1352	11/13/2023	Contr to Local Volunteer Orgs	7,600.00	Ongoing	01-65-901
Crest Road East Power Line	1355	02/24/2024	Rule 20C Undergrounding	577,069.90	One-Time	01-00-999
ADA Improvements Project	1356	02/12/2024	Additional Design & Engineering	11,500.00	One-Time	01-00-999
Area Landscaping	1357	02/12/2024	Additional Lanscaping - Bennet	8,100.00	Ongoing	01-75-932
Wildlife Management	1358	02/26/2024	Additional Coyote Mgmt	12,500.00	Ongoing	01-25-837
Other Law Enforcement Services	1359	03/11/2024	Auto Lic Plate Recog Program	34,420.00	One-Time	01-25-833
Other Law Enforcement Services	1360	03/11/2024	LIDAR/RADAR Speed Det Device	658.21	One-Time	01-25-833
			Total Amendments	1,041,310.31		
			Total Budgeted Use of Reserves	$ (1,084,473.31)		
			Fund Balance - July 1, 2023	4,633,046.00		
			Budgeted Use of Reserves	(1,084,473.31)		
			Reserve for Contingencies	(2,650,498.00)		
			Reserves Above Policy	$ 898,074.69		

City of Rolling Hills INCORPORATED JANUARY 24, 1957

Agenda Item No.: 13.B
Mtg. Date: 06/10/2024

TO: **HONORABLE MAYOR AND MEMBERS OF THE CITY COUNCIL**

FROM: **KARINA BAÑALES, CITY MANAGER**

THRU: **KARINA BAÑALES, CITY MANAGER**

SUBJECT: **ADOPT RESOLUTION NO. 1369 APPROVING A FIVE-YEAR MUNICIPAL LAW ENFORCEMENT SERVICES AGREEMENT (MLESA) WITH THE COUNTY OF LOS ANGELES FOR PUBLIC SERVICES PROVIDED BY THE LOS ANGELES COUNTY SHERIFF'S DEPARTMENT AND AUTHORIZING THE CITY MANAGER TO PROCURE SERVICES OF THE LOS ANGELES COUNTY SHERIFF'S DEPARTMENT ANNUALLY UP TO AN AMOUNT AUTHORIZED IN THE CITY'S OPERATING AND CAPITAL BUDGET FOR THE PERIOD OF JULY 1, 2024 THROUGH JUNE 30, 2029; AND AUTHORIZE THE MAYOR TO EXECUTE THE MLESA**

DATE: **June 10, 2024**

BACKGROUND:
The current Municipal Law Enforcement Services Agreement (MLESA) between the City of Rolling Hills and the County of Los Angeles is set to expire on June 30, 2024 (Attachment C). In preparation, a new five-year agreement has been drafted for the City Council's review and approval, with the next term starting on July 1, 2024, and concluding on June 30, 2029 (Attachment B). It is important to note that the 2024-2029 MLESA exhibits are not included as they are pending the individual contract agencies' agreements going to the Board of Supervisors for approval later this month. Staff will return to the City Council with exhibits at the first meeting in July.

Over the past year, a subcommittee from the California Contract Cities Association (CCCA), consisting of City Managers, collaborated with the County and the Los Angeles Sheriff's Department (LASD) to negotiate and revise the MLESA. The proposed agreement includes revisions that were mutually agreed upon by the County and the CCCA subcommittee (Attachment A).

In addition to the MLESAs approved over the past few decades, the contract cities have entered into three significant agreements concerning liability and indemnification for County services:

1977 Assumption of Liability: The County established a fund to cover liability costs associated with contract services, assuming liability and defense for contract cities (Attachment F) (replaced by the 1991 Joint Indemnity Agreement for law enforcement services).

1991 Joint Indemnity Agreement: The County and cities established the structure of the Liability Trust Fund, transferring responsibility for liability and payment for settlements and claims to this fund, which is fully funded by contract cities (Attachment G).

2009 Special Indemnity Agreement: The County and cities agreed to split the liability and funding responsibility equally for certain cases involving deputies or other peace officers incurring felony convictions or any criminal convictions of certain sexual crimes (Attachment H).

While the County accepted some of the recommended subcommittee changes, there were a number of changes not accepted. Additionally, no agreement on changes to liability and indemnity language was reached prior to the renewal deadline. As was added in Section 5.4 to the MLESA (Attachment B), the subcommittee and County will continue discussions regarding liability and indemnity language revisions to share the financial exposure with the County instead of the current burden falling completely on the Liability Trust Fund, and by extension, the contract cities.

This evening, staff seeks City Council consideration for adoption of the attached resolution authorizing the City Manager to sign the five-year MLESA agreement for 2024-2029.

DISCUSSION:
Contracting for law enforcement services in Los Angeles County dates back to 1954 when the City of Lakewood first contracted with the County. Currently, 42 cities contract with the County through the Los Angeles Sheriff's Department for primary and supplemental law enforcement services, representing almost half of the 88 Los Angeles cities.

Authority to Contract for Law Enforcement Services
Under California Government Code Section 51301 et seq, the City has the authority to contract with the County for public safety services. The term of any such contract shall not exceed five years but may be renewed for subsequent five-year periods, provided a decision to continue is made at least a year before the expiration of any current term. The upcoming MLESA is a five-year agreement requiring approval by June 30, 2024, to continue services.

County Can Recover Costs for Contract Services
According to California Government Code Section 51350, the County must charge the contracting city for all costs incurred due to the agreement. This excludes any indirect overhead charges or costs attributed to services provided countywide or are general county government operational overheads. Thus, the County’s Auditor/Controller established a complex formula to set the price of each contract service unit, and the Liability Trust Fund Claims Board determined the recommended funding level for the liability component based on an actuarial study. Together, these two components form the total cost per service unit assessed to the contract cities for each service unit procured.

City Orders Law Enforcement Resources from the County
Annually, the City issues a Service Level Authorization, commonly referred to as the “575 form,” which specifies the resources provided to the City. For reference, staff is presenting the

Fiscal Year 23/24 575 form (Attachment D).

For 2024-25, the City will procure the same number of resources as indicated in the FY23/24 575 form, with the estimated costs increasing by 3.94% and a 12% charge to the Liability Trust Fund covering settlements and claims arising from MLESA operations. Finance has incorporated the increase into the Fiscal Year 24/25 budget.

Changes to the 2024-2029 MLESA

The included MLESA includes several changes based on the contract cities negotiations that benefit the city. The changes include:

Performance will be by Service Unit Rather than Overall

The Agreement performance standard changes from one measure overall to several measures at the service unit level. As the MLESA performance is based on service minutes, the number of deputies and civilians procured by a city are translated into available minutes. This allows the County to mix and match minutes to achieve their 98-102% target but can lead to unintended consequences to underperform in areas like traffic, special assignment, or motor units.

- Benefit: The change would set the 98-102% performance target for each specific unit – patrol, motor, special assignment deputies increasing accountability to cities receiving the level of service expected when procuring specific resources. As an example, overages in patrol minutes cannot be made up by reducing service levels of a motor unit or special assignment deputy and vice versa.

Retaining Vehicle of Deleted Service Unit

When a city adds a new resource that requires a vehicle (i.e. new deputy), the city incurs a significant first-year expense for the additional vehicle required for this new deputy. The maintenance and replacement costs of the vehicle are already integrated into the annual charge to the city if the city keeps the new deputy. While the LASD has a practice on this, the language of the MLESA was not explicit to protect a city from losing a deputy temporarily and then paying another new vehicle cost when the city restored the deputy. The MLESA adds language that a city can regain access to a vehicle procured with a new deputy service unit when the unit is deleted and restored within 24 months.

- Benefit: This codifies the language and extends it from 12 to 24 months giving more flexibility for a city to avoid incurring a new vehicle cost.

Transfer of City Property to County

The Agreement requires separate written agreements managed at the LASD contract city stations to govern items purchased by the City and temporarily transferred to the County. Additionally, the County must maintain a detailed and regularly updated inventory of all non-vehicle City equipment in its possession, including descriptions, serial numbers (if applicable), condition upon receipt, and location.

- Benefit: This language increases transparency and accountability in the handling of the City's assets where the MLESA was previously silent.

Equipment Replacement after Extended Maintenance and Repair
The Agreement requires that the County will make best efforts to provide a temporary replacement if the original equipment takes more than 60 days to be returned.

- Benefit: The language strengthens the required effort the County must undertake to provide a replacement. A best effort would require the LASD to be more diligent in providing a replacement.

Continue Negotiations on Indemnity Agreements
The Agreement includes Section 5.4 which acknowledges indirectly the continued negotiations between the County and contract cities related to concerns that cities bear the full cost of liability for contract activities when the County should share in such liability. A Letter of Understanding (Attachment E) between the County and the California Contract Cities Association outlines how both parties will work towards addressing concerns in several areas raised by contract cities.

- Benefit: The language does not guarantee a change, but it recognizes a mutual interest in ensuring the long-term viability of the Liability Trust Fund and controlling the increasing burden placed on cities for activities a city does not control. The County controls aspects of law enforcement operations (i.e., training, supervision, hiring, discipline, etc.) and to some extent should incur some of the liability, such as when there is gross negligence not controllable by a city. Further negotiations are a positive step.

Liability Trust Fund Claims Board
As established in the 1991 Joint Indemnity Agreement, the County formed the Los Angeles Contract Cities Liability Trust Fund Claims Board (Board) to review and approve settlement of claims and lawsuits for money damages which are paid from the County's Contract Cities Liability Trust Fund. The Board consists of eleven members nominated by the California Contract Cities Association and appointed by the Los Angeles Board of Supervisors. The members include city council members, city managers, and representatives from the California Contract Cities Association.

The Liability Trust Fund is comprised of two funds – the Sheriff's Department Fund and the All Other Departments fund. This is a County trust account funded by contract cities to reimburse the County for all costs related contract city operations leading to litigation and settlements as a part of MLESA operations. The Liability Trust Fund is self-insured for liabilities up to $10 million and carries insurance up to $40,000,000.

The Liability Trust Fund has experienced significant payouts due to settlements and litigation work. The settlements are such a large exposure that insurers have been increasing the self-insurance retention (amount paid from the fund before tapping insurance) of $2 million in 2011-12 to $10 million in 2023-24, and the rate paid by contract cities has risen from 4% to 12%, respectively, and will be 12.5% in 2024-25.

Given that all activities of the contract cities in the MLESA are the responsibility of the County and contract cities have no authority to govern over actions to reduce liability, the subcommittee feels strongly of the need to revisit the liability and indemnity relationship between the contract cities and the County to ensure balance in who pays for settlements and

litigations. The purpose is to ensure the long-term viability of the Liability Trust Fund and the contract model. Further, with the County being exposed to more financial risk associated with operations that only they can control, there will be a greater incentive to ensure more risk reduction approaches and opportunities are leveraged to reduce the overall losses incurred by both the County and the contract cities.

While the subcommittee proposed changes to liability and indemnity language, the County desired additional time to discuss and consider changes. Consequently, the subcommittee will continue discussions on amending this language even after the MLESA is approved by the June 30, 2024 deadline, with the existing liability and indemnity language in place since the last MLESA.

CONCLUSION
City staff recommend approval of this revised MLESA. The changes to the MLESA strengthen the accountability for the City. Discussions continue related to revising liability and indemnity language.

FISCAL IMPACT:
Changes to the MLESA do not alter the cost structure of the previous agreement. Rates for law enforcement services are provided annually by the County of Los Angeles Auditor/Controller and are determined based on the fully burdened cost of deploying service units, including variables such as salary, benefits, equipment (vehicles, radios, maintenance, etc.), management overhead, vacation and sick relief, detective services, dispatch and front desk personnel, station jailer services, and civilian positions.

Staff will return with FY 24/25 575 form at the first meeting in July.

RECOMMENDATION:
Approve as presented.

ATTACHMENTS:
Attachment A - ResolutionNo1369_MLESA_FY2024-29_F.pdf
Attachment B - CA_AGR_240610_MLESA_2025-29_F.pdf
Attachment C - CA_AGR_190717_MLESA_2019-24_F_E.pdf
Attachment D - CA_AGR_230608_LACoSheriff_575Form_FY23-24_F_E.pdf
Attachment E - GV_GVO_240610_CCA_LiabilityTrustFund_LOU_FinalDraft.pdf
Attachment F - CA_AGR_1977_LACo_LASD_AssumptionOfLiability.pdf
Attachment G - CA_AGR_1991_LACo_LASD_JointIndemnity.pdf
Attachment H - CA_AGR_2009_LACo_LASD_SpecialIndemnity.pdf

RESOLUTION NO. 1369

A RESOLUTION OF THE CITY COUNCIL OF THE CITY OF ROLLING HILLS, CALIFORNIA, APPROVING A FIVE-YEAR MUNICIPAL LAW ENFORCEMENT SERVICES AGREEMENT WITH THE COUNTY OF LOS ANGELES FOR PUBLIC SERVICES PROVIDED BY THE LOS ANGELES COUNTY SHERIFF'S DEPARTMENT AND AUTHORIZING THE CITY MANAGER TO PROCURE SERVICES OF THE LOS ANGELES COUNTY SHERIFF'S DEPARTMENT ANNUALLY UP TO AN AMOUNT AUTHORIZED IN THE CITY'S OPERATING AND CAPITAL BUDGET FOR THE PERIOD OF JULY 1, 2024 THROUGH JUNE 30, 2029

WHEREAS, The City of Rolling Hills, California (City) and the County of Los Angeles (County) have previously entered into a Municipal Law Enforcement Service Agreement (MLESA) whereby the County through its Sheriff's Department (LASD) provides general and additional law enforcement services within the jurisdiction of the City; and

WHEREAS, the current MLESA expires on June 30, 2024, and the City desires to continue receiving general and additional law enforcement services from the County through the LASD for an additional five years; and

WHEREAS, the City intends to enter into an MLESA for a period starting July 1, 2024 through June 30, 2029 and to procure and allocate funds for such general law and additional services up to such amount appropriated in the City's Annual Operating and Capital Budgets; and

WHEREAS, the City relies upon the City Manager or designee in partnership with the Station Captain of the LASD to implement the MLESA in such manner to best protect the public safety interests of the City of Rolling Hills and to make such operational changes as necessary to implement the MLESA and fulfill the public safety needs of the City.

NOW, THEREFORE, BE IT FURTHER RESOLVED the City Council of the City of Rolling Hills does hereby resolve that:

Section 1. The City Council of the City of Rolling Hills hereby approves the Municipal Law Enforcement Services Agreement between the City and the County for

law enforcement and additional services for a five-year period beginning July 1, 2024 and expiring on June 30, 2029.

Section 2. The Mayor is authorized to execute the Municipal Law Enforcement Services Agreement on behalf of the City.

Section 3. The City Manager or his designee is authorized to procure annual services up to the appropriated amount provided in the City's Annual Operating and Capital Budgets and to make any such operational changes to further the public safety interest of the City when necessary and shall endeavor to bring any such item to the City Council when feasible. Permanently deleting or adding positions will be brought back to the City Council for authorization and approval.

Section 4. The City requests that the Los Angeles County Board of Supervisors, or its designated agent or agency, approve and authorize the performance of services requested in this resolution, subject to the terms and conditions set forth in the MLESA and any other relevant agreement(s).

Section 5. The City Clerk shall attest and certify the adoption of this resolution.

PASSED, APPROVED, AND ADOPTED this 10th day of June, 2024

_____
LEAH MIRSCH
MAYOR

ATTEST:

_____
CHRISTIAN HORVATH
CITY CLERK

STATE OF CALIFORNIA)
COUNTY OF LOS ANGELES) §§
CITY OF ROLLING HILLS)

The foregoing Resolution No. 1369 entitled:

A RESOLUTION OF THE CITY COUNCIL OF THE CITY OF ROLLING HILLS, CALIFORNIA, APPROVING A FIVE-YEAR MUNICIPAL LAW ENFORCEMENT SERVICES AGREEMENT WITH THE COUNTY OF LOS ANGELES FOR PUBLIC SERVICES PROVIDED BY THE LOS ANGELES COUNTY SHERIFF'S DEPARTMENT AND AUTHORIZING THE CITY MANAGER TO PROCURE SERVICES OF THE LOS ANGELES COUNTY SHERIFF'S DEPARTMENT ANNUALLY UP TO AN AMOUNT AUTHORIZED IN THE CITY'S OPERATING AND CAPITAL BUDGET FOR THE PERIOD OF JULY 1, 2024 THROUGH JUNE 30, 2029

was approved and adopted at a regular meeting of the City Council on the 10th day of June 2024, by the following roll call vote:

AYES:
NOES:
ABSENT:
ABSTAIN:

_____
CHRISTIAN HORVATH
CITY CLERK

MUNICIPAL LAW ENFORCEMENT SERVICES AGREEMENT
BY AND BETWEEN
COUNTY OF LOS ANGELES
AND CITY OF ROLLING HILLS

TABLE OF CONTENTS

SECTION	TITLE	PAGE
RECITALS		1
1.0	SCOPE OF SERVICES	1
2.0	ADMINISTRATION OF PERSONNEL	2
3.0	DEPLOYMENT OF PERSONNEL	3
4.0	PERFORMANCE OF AGREEMENT	6
5.0	INDEMNIFICATION	7
6.0	TERM OF AGREEMENT	8
7.0	RIGHT OF TERMINATION	9
8.0	BILLING RATES	9
9.0	PAYMENT PROCEDURES	10
10.0	NOTICES	11
11.0	AMENDMENTS	11
12.0	AUTHORIZATION WARRANTY	12
13.0	ENTIRE AGREEMENT	12
SIGNATURES		13
ATTACHMENT A:	Los Angeles County Sheriff's Department Service Level Authorization (SH-AD 575) Form	
ATTACHMENT B:	Contract City Law Enforcement Services and Equipment Master Rate Sheet	
ATTACHMENT C:	Public Safety Equipment Use Requirements	

MUNICIPAL LAW ENFORCEMENT SERVICES AGREEMENT
BY AND BETWEEN
COUNTY OF LOS ANGELES
AND CITY OF ROLLING HILLS

This Municipal Law Enforcement Services Agreement ("Agreement") is made and entered into this 10th day of June, 2024 by and between the County of Los Angeles ("County") and the City of Rolling Hills ("City").

RECITALS

A. Whereas, the City is desirous of contracting with the County for the performance of municipal law enforcement services by the Los Angeles County Sheriff's Department ("Sheriff's Department"); and

B. Whereas, the County is agreeable to rendering such municipal law enforcement services on the terms and conditions set forth in this Agreement; and

C. Whereas, this Agreement is authorized by Sections 56½ and 56¾ of the County Charter and California Government Code Section 51301.

NOW THEREFORE, in consideration of the mutual covenants contained herein, and for good and valuable consideration, the parties mutually agree as follows:

1.0 SCOPE OF SERVICES

1.1 The County, by and through the Sheriff's Department, agrees to provide general law enforcement services within the corporate limits of the City to the extent and in the manner hereinafter set forth in this Agreement.

1.2 Except as otherwise specifically set forth in this Agreement, such services shall only encompass duties and functions of the type coming within the jurisdiction of and customarily rendered by the Sheriff's Department under the County Charter, State of California statutes, and the City municipal codes.

1.3 General law enforcement services performed hereunder may include, if requested by the City, supplemental security support, supplemental sworn officer support, and supplemental professional civilian support staff.

2.0 ADMINISTRATION OF PERSONNEL

2.1 During the term of this Agreement, the Sheriff or his designee shall serve as the Chief of Police of the City and shall perform the functions of the Chief of Police at the direction of the City.

2.2 The rendition of the services performed by the Sheriff's Department, the standards of performance, the discipline of officers, and other matters incident to the performance of such services and the control of personnel so employed shall remain with the County. The City understands and agrees that, at the Sheriff's Department's sole discretion, the Sheriff's Department may redeploy personnel for mutual aid purposes pursuant to the California Emergency Services Act, codified at California Government Code Sections 8550-8668. Absent exigent circumstances, any sustained deployment of more than fifty percent (50%) of the City's contracted items, with the calculation determined by service unit type, requires consultation with the City manager or his/her designee. For the purpose of this section, exigent circumstances are defined as such cases where the immediacy of deployment is of such nature where prior consultation is materially detrimental to public safety and the length of such deployment does not exceed 24 hours.

2.3 In the event of a dispute between the parties to this Agreement as to the extent of the duties and functions to be rendered hereunder, or the minimum level or manner of performance of such service, the City shall be consulted and a mutual determination thereof shall be made by both the Sheriff's Department and the City. The City shall first consult with the Station Captain, Division Commander, and Division Chief, in an effort to reach a mutual determination. If a mutual determination cannot be realized at a subordinate level, then the matter will be elevated to a Sheriff's Department Assistant Sheriff or the Sheriff.

2.4 With regard to Paragraphs 2.2 and 2.3 above, the Sheriff's Department, in an unresolved dispute, shall have final and conclusive determination as between the parties hereto.

2.5 All City employees who work in conjunction with the Sheriff's Department pursuant to this Agreement shall remain employees of the City and shall not have

any claim or right to employment, civil service protection, salary, or benefits or claims of any kind from the County based on this Agreement. No City employees as such shall become employees of the County unless by specific additional agreement in the form of a merger agreement which must be concurrently adopted by the City and the County. The Sheriff's Department will provide approved City employees with the required training necessary to access authorized County programs (i.e. CAD, MDC, etc.), so such City employees can perform the functions of their positions.

2.6 While performing law enforcement services and functions under this Agreement, every Sheriff's Department employee shall be authorized to enforce all City laws and regulations, including all City codes and ordinances.

2.7 The City shall not be called upon to assume any liability for the direct payment of any Sheriff's Department salaries, wages, or other compensation to any County personnel performing services hereunder for the City. Except as herein otherwise specified, the City shall not be liable for compensation or indemnity to any County employee or agent of the County for injury or sickness arising out of the performance of services under this Agreement.

2.8 As part of its compliance with all applicable laws and regulations relating to employee hiring, the County agrees that the County Civil Service Rules to which it is subject and which prohibit discrimination on the basis of non-merit factors, shall for purposes of this Agreement be read and understood to prohibit discrimination on the basis of sexual orientation.

3.0 DEPLOYMENT OF PERSONNEL

3.1 Services performed hereunder and specifically requested by the City shall be developed in conjunction with the Sheriff's Department and indicated on Attachment A, Los Angeles County Sheriff's Department Service Level Authorization (SH-AD 575) Form, of this Agreement.

3.2 The City, or its designated representative, shall meet with its respective Sheriff's Department Station Captain when requesting law enforcement services to be performed in the City, and provide direction to the Sheriff's Department Station Captain regarding the method of deployment for such services. The City and the

Sheriff's Department shall also determine a minimum daily standard of staffing needs for services rendered to ensure an adequate personnel presence during station operation and patrol. The City and the Station Captain shall meet to discuss the minimum daily standard which is documented in Attachment A, Los Angeles County Sheriff's Department Service Level Authorization (SH-AD 575) Form, of this Agreement. The Station Captain shall endeavor to meet this standard without increased cost to the City. The Sheriff's Department shall ensure that all services are delivered in a manner consistent with the priorities, annual performance objectives, and goals established by the City.

3.3 The Sheriff's Department shall make every attempt to avoid deployment deficiencies (i.e., "busting" of cars) by following the daily minimum standard of staffing, as stipulated in Attachment A, Los Angeles County Sheriff's Department Service Level Authorization (SH-AD 575) Form, of this Agreement. Should deployment deficiencies occur, the Sheriff's Department should make every effort to reallocate those resources to the shift where the deficiencies occurred. Should the Sheriff's Department determine that a temporary increase, decrease, and/or realignment in the deployment methodologies is necessary, the Sheriff's Department shall promptly notify the City of this change in advance. In the event that prior notice is not possible, the City shall be notified of the change within two (2) City business days. If monthly service compliance falls below ninety-eight percent (98%) for each service unit type, then the Sheriff's Department Station Captain shall meet with the City to discuss compliance and identify a plan for resolution. If the quarterly and/or year-to-date (September 30th, December 31st, March 31st, and June 30th) service compliance falls below ninety-eight percent (98%) for each service unit type, then the respective Sheriff's Department Division Chief shall meet with the Sheriff's Department Station Captain and the City to discuss compliance and identify a plan for resolution. If the City is dissatisfied with the outcome of either resolution process, the matter will be elevated to a Sheriff's Department Assistant Sheriff or the Sheriff until all City concerns are fully resolved. Resolution may include, but is not limited to, the use of overtime, staffing adjustments, and/or City-initiated service suspensions, at no additional cost to the

City. If the City determines it is unnecessary, the City may waive either dispute resolution process discussed above.

3.3.1 The Sheriff's Department shall monitor and make every attempt to backfill vacant and impaired (to include loaned) sworn supervisorial overhead positions by the beginning of the following quarter.

3.3.2 The Sheriff's Department will work with the City to provide an appropriate tool and/or reports to demonstrate adequate service level compliance under this Agreement. Such service level compliance reports include, but not limited to, daily staffing levels, service levels, deployment of service units, daily deputy activity, or similar type data that is reasonably available.

3.4 A new Attachment A, Los Angeles County Sheriff's Department Service Level Authorization (SH-AD 575) Form, of this Agreement shall be authorized and signed annually by the City and the Sheriff or his designee effective each July 1, and attached hereto as an Amendment to this Agreement.

3.5 Should the City request a change in the level of service other than pursuant to the annual July 1 readjustment, a revised Attachment A, Los Angeles County Sheriff's Department Service Level Authorization (SH-AD 575) Form, of this Agreement shall be signed and authorized by the City and the Sheriff or his designee and attached hereto as an Amendment to this Agreement.

3.6 The most recent dated and signed Attachment A, Los Angeles County Sheriff's Department Service Level Authorization (SH-AD 575) Form, of this Agreement shall be the staffing level in effect between the County and the City.

3.7 The City is not limited to the services indicated in Attachment A, Los Angeles County Sheriff's Department Service Level Authorization (SH-AD 575) Form, of this Agreement. The City may also request any other service or equipment in the field of public safety, law, or related fields within the legal power of the Sheriff's Department to provide. Such other services and equipment shall be reflected in a revised Attachment A, Los Angeles County Sheriff's Department Service Level Authorization (SH-AD 575) Form, of this Agreement under the procedures set forth

in Paragraphs 3.4 and 3.5 above.

3.8 With regard to any public safety equipment requested by the City and set forth on Attachment A, Los Angeles County Sheriff's Department Service Level Authorization (SH-AD 575) Form, of this Agreement, the City shall adhere to the terms and conditions set forth in Attachment C, Public Safety Equipment Use Requirements, of this Agreement.

3.9 When a contracted service unit, requiring the procurement of a vehicle at the onset of service, is deleted from the Service Level Authorization (SH-AD-575) , and the City reinstates said service unit within a 24-month period, the City will not be required to procure a vehicle.

4.0 PERFORMANCE OF AGREEMENT

4.1 For the purpose of performing general law enforcement services under this Agreement, the County shall furnish and supply all necessary labor, supervision, equipment, technology, communication facilities, and supplies necessary to maintain the agreed level of service to be rendered hereunder.

4.2 Notwithstanding the foregoing, the City may provide additional resources for the County to utilize in performance of the services.

4.2.1 All bailments require a separate Bailment Agreement governing the County's use of the bailed equipment. Such Bailment Agreements shall be administered at the station level. A bailment is a legal arrangement where one party (City) temporarily transfers possession of specific property or assets to another party (County) to facilitate the provision of certain services.

4.2.2 All donations made by a City to the County will be governed by the most current Sheriff's Department donation procedures.

4.2.3 The County, through the Sheriff's Department, acknowledges its obligation to maintain an inventory of all non-vehicle equipment owned by the City ("City Equipment") provided to the County for its use. The inventory shall include, but not limited to, a detailed description of each item of City Equipment, its serial number (if applicable), its condition upon receipt, and its location. The County shall be responsible for regularly updating and maintaining the inventory of City Equipment, including documenting any changes in the status, condition, or location

of equipment. The inventory shall be kept current and accurate at all times during the term of this Agreement. Upon request by the City, the County shall provide access to the inventory records and facilitate any necessary inspections or audit of the City Equipment. The County shall cooperate fully with the City in verifying the accuracy and completeness of the inventory. In the event of loss, damage, or theft of any City Equipment while under the custody or control of the County, the County shall promptly notify the City in writing and provide a detailed explanation of the circumstances surrounding the incident. All inventory records shall be completed and maintained at the station level.

4.3 When and if both parties to this Agreement concur as to the necessity of maintaining a law enforcement headquarters or Sheriff's Department substation within the City which would not normally be provided by the Sheriff's Department, the City shall furnish at its own cost and expense all necessary office space, and the Sheriff's Department shall have authority to negotiate with the City regarding which entity shall pay for furniture and furnishings, office supplies, janitor service, telephone, light, water, and other utilities.

4.4 It is expressly further understood that in the event a local office or building is maintained in the City, such local office or building may be used by the Sheriff's Department in connection with the performance of its duties in territory outside of the City, provided, however, that the performance of such outside duties shall not be at any additional cost to the City.

4.5 Notwithstanding the foregoing, it is mutually agreed that in all instances where special supplies, stationery, notices, forms, and the like must be issued in the name of the City, the same shall be supplied by the City at its own cost and expense.

5.0 INDEMNIFICATION

5.1 The parties hereto have executed an Assumption of Liability Agreement approved by the County Board of Supervisors on December 27, 1977, and/or a Joint Indemnity Agreement approved by the County Board of Supervisors on October 8, 1991. Whichever of these documents the City has signed later in time is currently in effect and hereby made a part of and incorporated into this Agreement as if set out in full herein.

5.2 The parties hereto have also executed a County-City Special Indemnity Agreement approved by the County Board of Supervisors on August 25, 2009. This document is made a part of and incorporated into this Agreement as if set out in full herein.

5.3 In the event the County Board of Supervisors later approves a revised Joint Indemnity Agreement and the City executes the revised agreement, the subsequent agreement as of its effective date shall supersede the agreement previously in effect between the parties hereto.

5.4 Notwithstanding anything to the contrary contained in the Agreement, the indemnification term under this section shall be in effect for a period of nine (9) months, through and including March 31, 2025, with an automatic six-month (6) renewal thereafter, through and including September 30, 2025 ("Indemnification Extension"), unless: (a) this section is amended at any time prior to September 30, 2025; or (b) the entire Agreement is terminated earlier, pursuant to Section 7.0 of this Agreement. If the parties continue to perform under the Agreement after the expiration of the Indemnification Extension without any amendment to this section in accordance with Section 11.0, then the indemnification term under this section will be automatically renewed and incorporated herein for the entire duration of this Agreement.

6.0 TERM OF AGREEMENT

6.1 The term of this Agreement shall be from July 1, 2024 through June 30, 2029, unless sooner terminated or extended as provided for herein.

6.2 At the option of the County Board of Supervisors and with the consent of the City Council, this Agreement may be renewed or extended for successive periods not to exceed five (5) years each.

6.3 Nine (9) months prior to the expiration of this Agreement, the parties shall meet and confer in good faith to discuss the possible renewal or extension of this Agreement pursuant to Paragraph 6.2 above. The parties shall reach an agreement as to the terms of any renewal or extension period no later than six (6) months prior to the expiration of this Agreement. Absent mutual agreement by the parties within that time frame, this Agreement shall expire at the conclusion of the then-existing term.

7.0 RIGHT OF TERMINATION

7.1 Either party may terminate this Agreement as of the first day of July of any year upon notice in writing to the other party of not less than one hundred eighty (180) calendar days prior thereto.

7.2 Notwithstanding any provision herein to the contrary, the City may terminate this Agreement upon notice in writing to the County given within sixty (60) calendar days of receipt of written notice from the County of any increase in the rate for any service to be performed hereunder, and in such an event this Agreement shall terminate sixty (60) calendar days from the date of the City's notice to the County.

7.3 This Agreement may be terminated at any time, with or without cause, by either party upon written notice given to the other party at least one hundred eighty (180) calendar days before the date specified for such termination.

7.4 In the event of a termination, each party shall fully discharge all obligations owed to the other party accruing prior to the date of such termination, and, except as otherwise provided herein, each party shall be released from all obligations which would otherwise accrue subsequent to the date of termination.

7.5 In the case of termination of this Agreement, the Sheriff will provide only such duties as are required by law.

8.0 BILLING RATES

8.1 The City shall pay the County for the services and equipment provided under the terms of this Agreement at the billing rates set forth on Attachment B, Contract City Law Enforcement Services and Equipment Master Rate Sheet, of this Agreement, as established by the County Auditor-Controller.

8.2 The billing rates set forth on Attachment B, Contract City Law Enforcement Services and Equipment Master Rate Sheet, of this Agreement shall be readjusted by the County Auditor-Controller annually effective July 1 of each year, published by the County, and attached hereto as an Amendment to this Agreement, to reflect the cost of such service in accordance with the policies and procedures for the determination of such rates as adopted by the County Board of Supervisors.

8.3 The City shall be billed at the current fiscal year's billing rates based on the service level provided within the parameters of Attachment A, Los Angeles County

Sheriff's Department Service Level Authorization (SH-AD 575) Form, of this Agreement.

8.4 The billing rates for other services and equipment requested pursuant to Paragraph 3.7 of this Agreement and not set forth on Attachment B, Contract City Law Enforcement Services and Equipment Master Rate Sheet, of this Agreement shall be determined by the County Auditor-Controller in accordance with the policies and procedures established by the County Board of Supervisors and then set forth and published on a revised Attachment B, Contract City Law Enforcement Services and Equipment Master Rate Sheet, of this Agreement.

9.0 PAYMENT PROCEDURES

9.1 The County, through the Sheriff's Department, shall render to the City, after the close of each calendar month, a summarized invoice which covers all services performed during said month, and the City shall pay the County for all undisputed amounts within sixty (60) calendar days after date of the invoice.

9.2 If such payment is not delivered to the County office which is described on the invoice within sixty (60) calendar days after the date of the invoice, the County is entitled to recover interest thereon. For all disputed amounts, the City shall provide the County with written notice of the dispute including the invoice date, amount, and reasons for dispute within ten (10) calendar days after receipt of the invoice. The parties shall memorialize the resolution of the dispute in writing. For any disputed amounts, interest shall accrue if payment is not received within sixty (60) calendar days after the dispute resolution is memorialized.

9.3 Interest shall be at the rate of ten percent (10%) per annum or any portion thereof, calculated from the invoice due date, or in the case of disputed amounts, calculated from the date the resolution is memorialized.

9.4 Notwithstanding the provisions of California Government Code Section 907, if such payment is not delivered to the County office which is described on said invoice within sixty (60) calendar days after the date of the invoice, or in the case of disputed amounts, from the date the resolution is memorialized, the County may satisfy such indebtedness, including interest thereon, from any funds of the City on deposit with the County without giving further notice to the City of the County's

intention to do so.

10.0 NOTICES

10.1 Unless otherwise specified herein, all notices or demands required or permitted to be given or made under this Agreement shall be in writing and shall be hand delivered with signed receipt or mailed by first class registered or certified mail, postage prepaid, addressed to the parties at the following addresses and to the attention of the person named. Addresses and persons to be notified may be changed by either party by giving ten (10) calendar days prior written notice thereof to the other party.

10.2 Notices to the County shall be addressed as follows:

Los Angeles County Sheriff's Department
Contract Law Enforcement Bureau
Attn: Unit Commander
211 W. Temple Street. 7th Floor
Los Angeles, California 90012
Phone #: 213-229-1647

10.3 Notices to the City of shall be addressed as follows:

City of Rolling Hills
Attn: Karina Bañales, City Manager
Address: 2 Portuguese Bend Road, Rolling Hills, CA 90274
Phone #: 310-377-1521

11.0 AMENDMENTS

11.1 Except for changes pursuant to Paragraphs 8.2 and 8.4 of this Agreement, all changes, modifications, or amendments to this Agreement must be in the form of a written Amendment duly executed by the County Board of Supervisors and an authorized representative of the City.

11.2 Notwithstanding Paragraph 11.1 above, the Sheriff or his designee is hereby authorized to execute, on behalf of the County, any Amendments and/or supplemental agreements referenced in Sections 3.0, 4.0, and 9.0 of this Agreement.

11.3 In accordance with Paragraphs 8.2 and 8.4 of this Agreement, the Sheriff or his designee is hereby authorized to publish, on behalf of the County, the annual revised Attachment B, Contract City Law Enforcement Services and Equipment

Master Rate Sheet, of this Agreement. The revised Attachment B, Contract City Law Enforcement Services and Equipment Master Rate Sheet, of this Agreement shall serve as an Amendment to this Agreement, but shall not require the signature of either party.

12.0 AUTHORIZATION WARRANTY

12.1 The City represents and warrants that the person executing this Agreement for the City is an authorized agent who has actual authority to bind the City to each and every term, condition, and obligation of this Agreement and that all requirements of the City have been fulfilled to provide such actual authority.

12.2 The County represents and warrants that the person executing this Agreement for the County is an authorized agent who has actual authority to bind the County to each and every term, condition, and obligation of this Agreement and that all requirements of the County have been fulfilled to provide such actual authority.

13.0 ENTIRE AGREEMENT

This Agreement, including Attachment A, Attachment B, and Attachment C, and any Amendments hereto constitute the complete and exclusive statement of understanding of the parties which supersedes all previous agreements, written or oral, and all communications between the parties relating to the subject matter of this Agreement. No change to this Agreement shall be valid unless prepared pursuant to Section 11.0, Amendments, of this Agreement.

MUNICIPAL LAW ENFORCEMENT SERVICES AGREEMENT
BY AND BETWEEN
COUNTY OF LOS ANGELES
AND CITY OF ROLLING HILLS

IN WITNESS WHEREOF, the County of Los Angeles, by order of its Board of Supervisors, has caused this Agreement to be executed by the Sheriff of Los Angeles County, and the City has caused this Agreement to be executed by its duly authorized representative, on the dates written below.

COUNTY OF LOS ANGELES

By _____
ROBERT G. LUNA
Sheriff

Date _____

CITY OF ROLLING HILLS

By _____

Date _____

ATTEST:

By_____
City Clerk

APPROVED AS TO FORM:
DAWYN R. HARRISON
County Counsel

By _____
Principal Deputy County Counsel

APPROVED AS TO FORM:
CITY ATTORNEY

By _____

RECEIVED
JUL 17 2019
City of Rolling Hills
By

MUNICIPAL LAW ENFORCEMENT SERVICES AGREEMENT BY AND BETWEEN COUNTY OF LOS ANGELES AND CITY OF ROLLING HILLS

TABLE OF CONTENTS

SECTION	TITLE	PAGE
RECITALS		1
1.0	SCOPE OF SERVICES	1
2.0	ADMINISTRATION OF PERSONNEL	2
3.0	DEPLOYMENT OF PERSONNEL	3
4.0	PERFORMANCE OF AGREEMENT	5
5.0	INDEMNIFICATION	6
6.0	TERM OF AGREEMENT	6
7.0	RIGHT OF TERMINATION	7
8.0	BILLING RATES	7
9.0	PAYMENT PROCEDURES	8
10.0	NOTICES	9
11.0	AMENDMENTS	9
12.0	AUTHORIZATION WARRANTY	10
13.0	ENTIRE AGREEMENT	10
SIGNATURES		11

ATTACHMENT A: Los Angeles County Sheriff's Department Service Level Authorization (SH-AD 575) Form

ATTACHMENT B: Contract City Law Enforcement Services and Equipment Master Rate Sheet

ATTACHMENT C: Public Safety Equipment Use Requirements

MUNICIPAL LAW ENFORCEMENT SERVICES AGREEMENT
BY AND BETWEEN
COUNTY OF LOS ANGELES
AND CITY OF ROLLING HILLS

This Municipal Law Enforcement Services Agreement ("Agreement") is made and entered into this 24th day of June, 2019 by and between the County of Los Angeles ("County") and the City of Rolling Hills ("City").

RECITALS

A. Whereas, the City is desirous of contracting with the County for the performance of municipal law enforcement services by the Los Angeles County Sheriff's Department ("Sheriff's Department"); and

B. Whereas, the County is agreeable to rendering such municipal law enforcement services on the terms and conditions set forth in this Agreement; and

C. Whereas, this Agreement is authorized by Sections 56½ and 56¾ of the County Charter and California Government Code Section 51301.

NOW THEREFORE, in consideration of the mutual covenants contained herein, and for good and valuable consideration, the parties mutually agree as follows:

1.0 SCOPE OF SERVICES

1.1 The County, by and through the Sheriff's Department, agrees to provide general law enforcement services within the corporate limits of the City to the extent and in the manner hereinafter set forth in this Agreement.

1.2 Except as otherwise specifically set forth in this Agreement, such services shall only encompass duties and functions of the type coming within the jurisdiction of and customarily rendered by the Sheriff's Department under the County Charter, State of California statutes, and the City municipal codes.

1.3 General law enforcement services performed hereunder may include, if requested by the City, supplemental security support, supplemental sworn officer support, and supplemental professional civilian support staff.

2.0 ADMINISTRATION OF PERSONNEL

2.1 During the term of this Agreement, the Sheriff or his designee shall serve as the Chief of Police of the City and shall perform the functions of the Chief of Police at the direction of the City.

2.2 The rendition of the services performed by the Sheriff's Department, the standards of performance, the discipline of officers, and other matters incident to the performance of such services and the control of personnel so employed shall remain with the County. The City understands and agrees that, at the Sheriff's Department's sole discretion, the Sheriff's Department may redeploy personnel for mutual aid purposes pursuant to the California Emergency Services Act, codified at California Government Code Sections 8550-8668. Absent exigent circumstances, any sustained deployment of more than fifty percent (50%) of the City's contracted items requires consultation with the City manager or his/her designee.

2.3 In the event of a dispute between the parties to this Agreement as to the extent of the duties and functions to be rendered hereunder, or the minimum level or manner of performance of such service, the City shall be consulted and a mutual determination thereof shall be made by both the Sheriff's Department and the City. The City shall first consult with the Station Captain, Division Commander, and Division Chief, in an effort to reach a mutual determination. If a mutual determination cannot be realized at a subordinate level, then the matter will be elevated to a Sheriff's Department Assistant Sheriff or the Sheriff.

2.4 With regard to Paragraphs 2.2 and 2.3 above, the Sheriff's Department, in an unresolved dispute, shall have final and conclusive determination as between the parties hereto.

2.5 All City employees who work in conjunction with the Sheriff's Department pursuant to this Agreement shall remain employees of the City and shall not have any claim or right to employment, civil service protection, salary, or benefits or claims of any kind from the County based on this Agreement. No City employees as such shall become employees of the County unless by specific additional agreement in the form of a merger agreement which must be concurrently adopted

by the City and the County. The Sheriff's Department will provide approved City employees with the required training necessary to access authorized County programs (i.e. CAD, MDC, etc.), so such City employees can perform the functions of their positions.

2.6 While performing law enforcement services and functions under this Agreement, every Sheriff's Department employee shall be authorized to enforce all City laws and regulations, including all City codes and ordinances.

2.7 The City shall not be called upon to assume any liability for the direct payment of any Sheriff's Department salaries, wages, or other compensation to any County personnel performing services hereunder for the City. Except as herein otherwise specified, the City shall not be liable for compensation or indemnity to any County employee or agent of the County for injury or sickness arising out of the performance of services under this Agreement.

2.8 As part of its compliance with all applicable laws and regulations relating to employee hiring, the County agrees that the County Civil Service Rules to which it is subject and which prohibit discrimination on the basis of non-merit factors, shall for purposes of this Agreement be read and understood to prohibit discrimination on the basis of sexual orientation.

3.0 DEPLOYMENT OF PERSONNEL

3.1 Services performed hereunder and specifically requested by the City shall be developed in conjunction with the Sheriff's Department and indicated on Attachment A, Los Angeles County Sheriff's Department Service Level Authorization (SH-AD 575) Form, of this Agreement.

3.2 The City, or its designated representative, shall meet with its respective Sheriff's Department Station Captain when requesting law enforcement services to be performed in the City, and provide direction to the Sheriff's Department Station Captain regarding the method of deployment for such services. The City and the Sheriff's Department shall also determine a minimum daily standard of staffing needs for services rendered to ensure an adequate personnel presence during station operation and patrol. The City and the Station Captain shall meet to discuss the minimum daily standard which is documented in Attachment A, Los Angeles

County Sheriff's Department Service Level Authorization (SH-AD 575) Form, of this Agreement. The Station Captain shall endeavor to meet this standard without increased cost to the City. The Sheriff's Department shall ensure that all services are delivered in a manner consistent with the priorities, annual performance objectives, and goals established by the City.

3.3 The Sheriff's Department shall make every attempt to avoid deployment deficiencies (i.e., "busting" of cars) by following the daily minimum standard of staffing, as stipulated in Attachment A, Los Angeles County Sheriff's Department Service Level Authorization (SH-AD 575) Form, of this Agreement. Should deployment deficiencies occur, the Sheriff's Department should make every effort to reallocate those resources to the shift where the deficiencies occurred. Should the Sheriff's Department determine that a temporary increase, decrease, and/or realignment in the deployment methodologies is necessary, the Sheriff's Department shall promptly notify the City of this change in advance. In the event that prior notice is not possible, the City shall be notified of the change within two (2) City business days. If monthly service compliance falls below ninety-eight percent (98%), then the Sheriff's Department Station Captain shall meet with the City to discuss compliance and identify a plan for resolution. If the quarterly and/or year-to-date (September 30th, December 31st, March 31st, and June 30th) service compliance falls below ninety-eight percent (98%), then the respective Sheriff's Department Division Chief shall meet with the Sheriff's Department Station Captain and the City to discuss compliance and identify a plan for resolution. If the City is dissatisfied with the outcome of either resolution process, the matter will be elevated to a Sheriff's Department Assistant Sheriff or the Sheriff until all City concerns are fully resolved. Resolution may include, but is not limited to, the use of overtime, staffing adjustments, and/or City-initiated service suspensions, at no additional cost to the City. If the City determines it is unnecessary, the City may waive either dispute resolution process discussed above.

3.4 A new Attachment A, Los Angeles County Sheriff's Department Service Level Authorization (SH-AD 575) Form, of this Agreement shall be authorized and signed annually by the City and the Sheriff or his designee effective each July 1,

and attached hereto as an Amendment to this Agreement.

3.5 Should the City request a change in the level of service other than pursuant to the annual July 1 readjustment, a revised Attachment A, Los Angeles County Sheriff's Department Service Level Authorization (SH-AD 575) Form, of this Agreement shall be signed and authorized by the City and the Sheriff or his designee and attached hereto as an Amendment to this Agreement.

3.6 The most recent dated and signed Attachment A, Los Angeles County Sheriff's Department Service Level Authorization (SH-AD 575) Form, of this Agreement shall be the staffing level in effect between the County and the City.

3.7 The City is not limited to the services indicated in Attachment A, Los Angeles County Sheriff's Department Service Level Authorization (SH-AD 575) Form, of this Agreement. The City may also request any other service or equipment in the field of public safety, law, or related fields within the legal power of the Sheriff's Department to provide. Such other services and equipment shall be reflected in a revised Attachment A, Los Angeles County Sheriff's Department Service Level Authorization (SH-AD 575) Form, of this Agreement under the procedures set forth in Paragraphs 3.4 and 3.5 above.

3.8 With regard to any public safety equipment requested by the City and set forth on Attachment A, Los Angeles County Sheriff's Department Service Level Authorization (SH-AD 575) Form, of this Agreement, the City shall adhere to the terms and conditions set forth in Attachment C, Public Safety Equipment Use Requirements, of this Agreement.

4.0 PERFORMANCE OF AGREEMENT

4.1 For the purpose of performing general law enforcement services under this Agreement, the County shall furnish and supply all necessary labor, supervision, equipment, communication facilities, and supplies necessary to maintain the agreed level of service to be rendered hereunder.

4.2 Notwithstanding the foregoing, the City may provide additional resources for the County to utilize in performance of the services.

4.3 When and if both parties to this Agreement concur as to the necessity of maintaining a law enforcement headquarters or Sheriff's Department substation

within the City which would not normally be provided by the Sheriff's Department, the City shall furnish at its own cost and expense all necessary office space, and the Sheriff's Department shall have authority to negotiate with the City regarding which entity shall pay for furniture and furnishings, office supplies, janitor service, telephone, light, water, and other utilities.

4.4 It is expressly further understood that in the event a local office or building is maintained in the City, such local office or building may be used by the Sheriff's Department in connection with the performance of its duties in territory outside of the City, provided, however, that the performance of such outside duties shall not be at any additional cost to the City.

4.5 Notwithstanding the foregoing, it is mutually agreed that in all instances where special supplies, stationery, notices, forms, and the like must be issued in the name of the City, the same shall be supplied by the City at its own cost and expense.

5.0 INDEMNIFICATION

5.1 The parties hereto have executed an Assumption of Liability Agreement approved by the County Board of Supervisors on December 27, 1977, and/or a Joint Indemnity Agreement approved by the County Board of Supervisors on October 8, 1991. Whichever of these documents the City has signed later in time is currently in effect and hereby made a part of and incorporated into this Agreement as if set out in full herein.

5.2 The parties hereto have also executed a County-City Special Indemnity Agreement approved by the County Board of Supervisors on August 25, 2009. This document is made a part of and incorporated into this Agreement as if set out in full herein.

5.3 In the event the County Board of Supervisors later approves a revised Joint Indemnity Agreement and the City executes the revised agreement, the subsequent agreement as of its effective date shall supersede the agreement previously in effect between the parties hereto.

6.0 TERM OF AGREEMENT

6.1 The term of this Agreement shall be from July 1, 2019 through June 30, 2024, unless sooner terminated or extended as provided for herein.

6.2 At the option of the County Board of Supervisors and with the consent of the City

Council, this Agreement may be renewed or extended for successive periods not to exceed five (5) years each.

6.3 Nine (9) months prior to the expiration of this Agreement, the parties shall meet and confer in good faith to discuss the possible renewal or extension of this Agreement pursuant to Paragraph 6.2 above. The parties shall reach an agreement as to the terms of any renewal or extension period no later than six (6) months prior to the expiration of this Agreement. Absent mutual agreement by the parties within that time frame, this Agreement shall expire at the conclusion of the then-existing term.

7.0 RIGHT OF TERMINATION

7.1 Either party may terminate this Agreement as of the first day of July of any year upon notice in writing to the other party of not less than sixty (60) calendar days prior thereto.

7.2 Notwithstanding any provision herein to the contrary, the City may terminate this Agreement upon notice in writing to the County given within sixty (60) calendar days of receipt of written notice from the County of any increase in the rate for any service to be performed hereunder, and in such an event this Agreement shall terminate sixty (60) calendar days from the date of the City's notice to the County.

7.3 This Agreement may be terminated at any time, with or without cause, by either party upon written notice given to the other party at least one hundred eighty (180) calendar days before the date specified for such termination.

7.4 In the event of a termination, each party shall fully discharge all obligations owed to the other party accruing prior to the date of such termination, and, except as otherwise provided herein, each party shall be released from all obligations which would otherwise accrue subsequent to the date of termination.

8.0 BILLING RATES

8.1 The City shall pay the County for the services and equipment provided under the terms of this Agreement at the billing rates set forth on Attachment B, Contract City Law Enforcement Services and Equipment Master Rate Sheet, of this Agreement, as established by the County Auditor-Controller.

8.2 The billing rates set forth on Attachment B, Contract City Law Enforcement

Services and Equipment Master Rate Sheet, of this Agreement shall be readjusted by the County Auditor-Controller annually effective July 1 of each year, published by the County, and attached hereto as an Amendment to this Agreement, to reflect the cost of such service in accordance with the policies and procedures for the determination of such rates as adopted by the County Board of Supervisors.

8.3 The City shall be billed at the current fiscal year's billing rates based on the service level provided within the parameters of Attachment A, Los Angeles County Sheriff's Department Service Level Authorization (SH-AD 575) Form, of this Agreement.

8.4 The billing rates for other services and equipment requested pursuant to Paragraph 3.7 of this Agreement and not set forth on Attachment B, Contract City Law Enforcement Services and Equipment Master Rate Sheet, of this Agreement shall be determined by the County Auditor-Controller in accordance with the policies and procedures established by the County Board of Supervisors and then set forth and published on a revised Attachment B, Contract City Law Enforcement Services and Equipment Master Rate Sheet, of this Agreement.

9.0 PAYMENT PROCEDURES

9.1 The County, through the Sheriff's Department, shall render to the City, after the close of each calendar month, a summarized invoice which covers all services performed during said month, and the City shall pay the County for all undisputed amounts within sixty (60) calendar days after date of the invoice.

9.2 If such payment is not delivered to the County office which is described on the invoice within sixty (60) calendar days after the date of the invoice, the County is entitled to recover interest thereon. For all disputed amounts, the City shall provide the County with written notice of the dispute including the invoice date, amount, and reasons for dispute within ten (10) calendar days after receipt of the invoice. The parties shall memorialize the resolution of the dispute in writing. For any disputed amounts, interest shall accrue if payment is not received within sixty (60) calendar days after the dispute resolution is memorialized.

9.3 Interest shall be at the rate of ten percent (10%) per annum or any portion thereof, calculated from the last day of the month in which the services were performed, or

in the case of disputed amounts, calculated from the date the resolution is memorialized.

9.4 Notwithstanding the provisions of California Government Code Section 907, if such payment is not delivered to the County office which is described on said invoice within sixty (60) calendar days after the date of the invoice, or in the case of disputed amounts, from the date the resolution is memorialized, the County may satisfy such indebtedness, including interest thereon, from any funds of the City on deposit with the County without giving further notice to the City of the County's intention to do so.

10.0 NOTICES

10.1 Unless otherwise specified herein, all notices or demands required or permitted to be given or made under this Agreement shall be in writing and shall be hand delivered with signed receipt or mailed by first class registered or certified mail, postage prepaid, addressed to the parties at the following addresses and to the attention of the person named. Addresses and persons to be notified may be changed by either party by giving ten (10) calendar days prior written notice thereof to the other party.

10.2 Notices to the County shall be addressed as follows:

Los Angeles County Sheriff's Department
Contract Law Enforcement Bureau
Attn: Unit Commander
211 W. Temple Street. 7th Floor
Los Angeles, California 90012
Phone #: 213-229-1647

10.3 Notices to the City of shall be addressed as follows:

City of Rolling Hills
Attn: Elaine Jeng
Address: 2 Portuguese Bend Road
Phone #: Rolling Hills, CA 90274
310/377-1521

11.0 AMENDMENTS

11.1 Except for changes pursuant to Paragraphs 8.2 and 8.4 of this Agreement, all changes, modifications, or amendments to this Agreement must be in the form of a written Amendment duly executed by the County Board of Supervisors and an

authorized representative of the City.

11.2 Notwithstanding Paragraph 11.1 above, the Sheriff or his designee is hereby authorized to execute, on behalf of the County, any Amendments and/or supplemental agreements referenced in Sections 3.0, 4.0, and 9.0 of this Agreement.

11.3 In accordance with Paragraphs 8.2 and 8.4 of this Agreement, the Sheriff or his designee is hereby authorized to publish, on behalf of the County, the annual revised Attachment B, Contract City Law Enforcement Services and Equipment Master Rate Sheet, of this Agreement. The revised Attachment B, Contract City Law Enforcement Services and Equipment Master Rate Sheet, of this Agreement shall serve as an Amendment to this Agreement, but shall not require the signature of either party.

12.0 AUTHORIZATION WARRANTY

12.1 The City represents and warrants that the person executing this Agreement for the City is an authorized agent who has actual authority to bind the City to each and every term, condition, and obligation of this Agreement and that all requirements of the City have been fulfilled to provide such actual authority.

12.2 The County represents and warrants that the person executing this Agreement for the County is an authorized agent who has actual authority to bind the County to each and every term, condition, and obligation of this Agreement and that all requirements of the County have been fulfilled to provide such actual authority.

13.0 ENTIRE AGREEMENT

This Agreement, including Attachment A, Attachment B, and Attachment C, and any Amendments hereto constitute the complete and exclusive statement of understanding of the parties which supersedes all previous agreements, written or oral, and all communications between the parties relating to the subject matter of this Agreement. No change to this Agreement shall be valid unless prepared pursuant to Section 11.0, Amendments, of this Agreement.

MUNICIPAL LAW ENFORCEMENT SERVICES AGREEMENT
BY AND BETWEEN
COUNTY OF LOS ANGELES
AND CITY OF ROLLING HILLS

IN WITNESS WHEREOF, the County of Los Angeles, by order of its Board of Supervisors, has caused this Agreement to be executed by the Sheriff of Los Angeles County, and the City has caused this Agreement to be executed by its duly authorized representative, on the dates written below.

COUNTY OF LOS ANGELES

By _____
ALEX VILLANUEVA
Sheriff

Date 07/09/19

CITY OF ROLLING HILLS

By _____
Mayor

Date 6-24-19

ATTEST:

By _____
City Clerk

APPROVED AS TO FORM:
MARY C. WICKHAM
County Counsel

By APPROVAL ON FILE
Principal Deputy County Counsel

APPROVED AS TO FORM:
CITY ATTORNEY

By _____

PUBLIC SAFETY EQUIPMENT USE REQUIREMENTS

1.0 TRANSFER OF PUBLIC SAFETY EQUIPMENT

1.1 The County, through the Sheriff's Department, hereby transfers the public safety equipment set forth on Attachment A, Los Angeles County Sheriff's Department Service Level Authorization (SH-AD 575) Form, of this Agreement ("Equipment") for the exclusive use of the City during the term of the Agreement.

2.0 USE OF EQUIPMENT

2.1 The City may use the Equipment for any lawful purpose, including use in connection with public safety activities in all areas under the City's jurisdiction.

2.2 The City shall not use or operate the Equipment in violation of any federal, state, or local law, rule, regulation, or ordinance.

2.3 The Equipment shall not be used or operated as follows:

2.3.1 In a manner subjecting the Equipment to depreciation above the normal depreciation associated with public safety use; and/or

2.3.2 For an illegal purpose or by a person under the influence of alcohol or narcotics.

3.0 SAFEKEEPING AND MAINTENANCE

3.1 The City shall exercise due care for the safekeeping of the Equipment during the term of the Agreement.

3.2 The City shall ensure that the Equipment is kept in good working order and condition, shall ensure that the Equipment is scheduled and available to County for the performance of its regularly scheduled maintenance by the County, and shall comply in every respect with any manufacturer's/owner's manual that comes with the Equipment.

3.3 The County shall perform all maintenance and repairs required for the proper operation of the Equipment. Except as otherwise set forth herein, such maintenance and repairs are provided in exchange for the City's payment of the annual billing rates set forth on Attachment B, Contract City Law Enforcement Services and Equipment Master Rate Sheet, of the Agreement. The City has the right to inspect said Equipment prior to acceptance of the Equipment following maintenance and repairs by the County.

3.4 Maintenance and repairs provided by the County under the Agreement may be

performed by the County, its third party vendors, and/or the manufacturer of the Equipment.

3.5 The County shall assume responsibility for ensuring that the Equipment has been inspected or otherwise tested in accordance with the laws of the State of California and the United States prior to use by the City.

3.6 The City shall inspect the Equipment upon initial delivery and return from County following maintenance and repair, and, by acceptance thereof, finds the Equipment in good working order and condition.

3.7 The Equipment shall be maintained and repaired solely by the County. The City and any of its third party vendors are prohibited from performing any maintenance and repairs on the Equipment.

3.8 All regularly scheduled maintenance shall be performed by the County, and the City shall timely present the Equipment to the County for the performance of regularly scheduled maintenance at the direction of, and in accordance with the policies and procedures of, the Sheriff's Department's Communications and Fleet Management Bureau. The Sheriff's Department shall make every effort to perform any maintenance in a timely manner.

3.9 Any Equipment requiring maintenance and repair by the County for any extended length of time, as determined by the Sheriff's Department's Communications and Fleet Management Bureau, may, at the sole discretion of the County, receive a temporary replacement piece of Equipment. All terms and conditions set forth herein shall apply to the City's use of any temporary replacement Equipment provided by the County. The County shall not be responsible for any damages or liability resulting from the City's loss of use of the Equipment during the performance of maintenance and repair services by the County.

4.0 INSPECTION BY COUNTY

4.1 The County shall have the right to inspect the Equipment, immediately upon request by the County, at any time during the term of the Agreement. The City shall provide the County with such operating, and other information, or copies of any such records maintained by the City with respect to the Equipment, as the County or any government agency may require from time to time.

5.0 TITLES

5.1 The County shall retain ownership of the Equipment used by the City during the term of the Agreement. Legal title to the Equipment is, and shall, at all times, remain in the name of the County. The Equipment shall not be transferred or delivered by the City to any persons other than the County without the County's prior written consent.

6.0 INDEMNIFICATION

6.1 The City agrees to indemnify, defend, and hold harmless the County from any and all liability, losses, or damages the County may suffer and from any claims, demands, costs, or judgments against the County arising out of City's use or operation of the Equipment. This indemnification does not extend to (1) any liability resulting from inherent defects or malfunctions in such Equipment related to manufacturer's acts or omissions, or (2) negligent or wrongful maintenance or repair of the Equipment provided by the County.

7. RISK OF LOSS

7.1 The City shall assume all risk of loss to the Equipment from the time it is delivered by the County to the City, and inspected and accepted by the City, until (1) the Equipment is returned to the County upon expiration or termination of the Agreement, or (2) the County regains temporary possession of the Equipment for purposes of providing maintenance and repair.

7.2 Upon inspection/acceptance of the Equipment, the City shall be responsible for any and all damage to the Equipment, except those damages resulting from (1) inherent defects or malfunctions in such Equipment related to manufacturer's acts or omissions, or (2) the negligent or wrongful maintenance or repair of the Equipment provided by the County.

7.3 In the event of damage to the Equipment or the Equipment is in need of repair, the City shall notify the County to that effect and follow such instructions that the County may provide with respect to repair or disposal of the Equipment. If the Equipment is lost, stolen, destroyed, or declared to be a total constructive loss (subject to the County's agreement as to such condition), the City shall properly notify the County thereof and hold any Equipment for disposal by the County. With respect to any loss, theft, or destruction of the Equipment, the County and the City shall negotiate the value for comparable equipment in a condition similar to the lost, stolen, or destroyed Equipment immediately prior to any such loss. The City shall reimburse the County for the value of the lost, stolen, or destroyed Equipment.

8.0 BILLING RATES

8.1 As further discussed in Section 8.0, Billing Rates, of the Agreement, the City shall pay the County for the use of the Equipment provided under the Agreement at the annual billing rates set forth on Attachment B, Contract City Law Enforcement Services and Equipment Master Rate Sheet, of the Agreement, as established by the County Auditor-Controller.

LOS ANGELES COUNTY SHERIFF'S DEPARTMENT
CONTRACT CITY LAW ENFORCEMENT SERVICES
SERVICE LEVEL AUTHORIZATION (SH-AD 575)

CITY: Rolling Hills **FISCAL YEAR:** 2023-2024 **EFFECTIVE DATE:** 7/1/2023

DEPUTY SHERIFF SERVICE UNIT

RANK	RELIEF FACTOR	SERVICE CODE	NEW	PREV	CHANGE	ANNUAL RATE	ESTIMATED TOTAL ANNUAL COST	LIABILITY 12%	TOTAL ANNUAL COST W/LIABILITY	ANNUAL HOURS PER SERVICE UNIT	ANNUAL HOURS SCHEDULED	ANNUAL MINUTES SCHEDULED	PERSONNEL REQUIRED
Deputy Sheriff	56-Hour Unit	307	0.50	0.50	0.00	$ 499,296.00	$ 249,648.00	$ 29,957.76	$ 279,605.76	2,920	1,460	87,600	0.816
Deputy Sheriff	Non-Relief	310	0.16	0.16	0.00	$ 324,218.00	$ 51,874.88	$ 6,224.99	$ 58,099.87	1,789	286	17,174	0.160
					0.00				$ -		0	0	0.000

DEPUTY SHERIFF SERVICE UNIT (BONUS)

RANK	RELIEF FACTOR	SERVICE CODE	NEW	PREV	CHANGE	ANNUAL RATE	ESTIMATED TOTAL ANNUAL COST	LIABILITY 12%	TOTAL ANNUAL COST W/LIABILITY	ANNUAL HOURS PER SERVICE UNIT	ANNUAL HOURS SCHEDULED	ANNUAL MINUTES SCHEDULED	PERSONNEL REQUIRED
Deputy Sheriff, Bonus I	Non-Relief	305	0.12	0.12	0.00	$ 348,030.00	$ 41,763.60	$ 5,011.63	$ 46,775.23	1,789	215	12,881	0.120
					0.00				$ -		0	0	0.000

GROWTH/GRANT DEPUTY UNIT

RANK	RELIEF FACTOR	SERVICE CODE	NEW	PREV	CHANGE	ANNUAL RATE	ESTIMATED TOTAL ANNUAL COST	LIABILITY 12%	TOTAL ANNUAL COST W/LIABILITY	ANNUAL HOURS PER SERVICE UNIT	ANNUAL HOURS SCHEDULED	ANNUAL MINUTES SCHEDULED	PERSONNEL REQUIRED
Grant Special Assignment Deputy	Non-Relief	312	0.08	0.08	0.00	$ 226,605.00	$ 18,128.40	$ 2,175.41	$ 20,303.81	1,789	143	8,587	0.080
					0.00				$ -		0	0	0.000
					0.00				$ -		0	0	0.000
					0.00				$ -		0	0	0.000

SUPPLEMENTAL POSITIONS

RANK	RELIEF FACTOR	SERVICE CODE	NEW	PREV	CHANGE	ANNUAL RATE	ESTIMATED TOTAL ANNUAL COST	LIABILITY 12%	TOTAL ANNUAL COST W/LIABILITY	ANNUAL HOURS PER SERVICE UNIT	ANNUAL HOURS SCHEDULED	ANNUAL MINUTES SCHEDULED	PERSONNEL REQUIRED
Motor Deputy	Non-Relief	305A	0.04	0.04	0.00	$ 324,218.00	$ 12,968.72	$ 1,556.25	$ 14,524.97	1,789	72	4,294	0.040
					0.00				$ -		0	0	0.000
					0.00				$ -		0	0	0.000
					0.00				$ -		0	0	0.000

Estimated Cost for Service Units: $ 374,383.60 Total Liability (12%): $ 44,926.03 Estimated Subtotal: $ 419,309.63

Public Safety Equipment Cost (See page 3): $ -

Estimated Total Annual Cost: $ 419,309.63

The terms of this Service Level Authorization (SH-AD 575) will remain in effect until a subsequent SH-AD 575 is signed and received by LASD. Notwithstanding, annual rates shall be revised annually per Sections 8.2 and 11.3 of the MLESA.

LASD Approval By:

Michael A. White — UNIT COMMANDER NAME

SIGNATURE — DATE: 6/6/23

Report Prepared By:

Mina Cho — SERGEANT — DATE: 5/30/2023

City Approval By:

"I certify that I am authorized to make this commitment on behalf of the City."

ELAINE JENG — CITY OFFICIAL NAME

SIGNATURE — DATE: 06/08/2023

Processed at CLEB By:

SERGEANT — DATE: 07-13-2023

LOS ANGELES COUNTY SHERIFF'S DEPARTMENT
CONTRACT CITY LAW ENFORCEMENT SERVICES
SERVICE LEVEL AUTHORIZATION (SH-AD 575)
DEPLOYMENT OF PERSONNEL

City: Rolling Hills **Fiscal Year:** 2023-2024 **Effective Date:** 7/1/2023

SERVICE UNIT	TOTAL UNITS PURCHASED	GENERAL LAW			TRAFFIC LAW			MOTOR DEP	SAD	D.B.	TEAM LEADER	TOTAL UNITS ASSIGNED
		EM	AM	PM	EM	AM	PM					
DEPUTY SHERIFF												
Non-Relief	**0.16**					0.08	0.08					**0.16**
40-Hour Unit	**0.00**											**0.00**
56-Hour Unit	**0.50**	0.16	0.17	0.17								**0.50**
70-Hour Unit	**0.00**											**0.00**
Motor (Non-Relief)	**0.04**							0.04				**0.04**
DEPUTY BONUS												
Non-Relief	**0.12**								0.12			**0.12**
40-Hour Unit	**0.00**											**0.00**
56-Hour Unit	**0.00**											**0.00**
70-Hour Unit	**0.00**											**0.00**
GROWTH DEPUTY												
Deputy	**0.00**											**0.00**
SAD	**0.00**											**0.00**
Bonus I	**0.00**											**0.00**
Motor (Non-Relief)	**0.00**											**0.00**
GRANT DEPUTY												
Deputy	**0.00**											**0.00**
SAD	**0.08**								0.08			**0.08**
Bonus I	**0.00**											**0.00**
Motor (Non-Relief)	**0.00**											**0.00**

Routine City Helicopter Billing Agreement	YES ☐	NO ☑
License Detail - Business License & Renewal Applications	YES ☐	NO ☑
License Detail - Acts on Violations Observed within the City	YES ☐	NO ☑
S.T.A.R. Deputy Program	YES ☐	NO ☑
Other Supplemental Services	YES ☑	NO ☐

NOTE: License Detail is billed on an hourly basis and billed monthly as service is provided.

	Sworn						
	Lieutenant	Sergeant	Bonus Deputy	Motor Deputy	Deputy	SAD	Total
Hours	0	0	215	72	1,746	143	2,176
Minutes	0	0	12,881	4,294	104,774	8,587	130,536
Personnel	0.000	0.000	0.120	0.040	0.976	0.080	1.216

	Civilian			
	SSO	LET/CSA/CA/PCO	Clerical	Total
Hours	0	0	0	0
Minutes	0	0	0	0
Personnel	0.000	0.000	0.000	0.000

FOR CONTRACT LAW ENFORCEMENT BUREAU USE ONLY			
BILLING MEMO REQUIRED AND SUBMITTED:	YES ☐	NO ☐	N/A ☐
(PERSONNEL TRANSACTION REQUEST) "PTR" REQUIRED AND SUBMITTED:	YES ☐	NO ☐	N/A ☐
ORGANIZATIONAL CHART REQUIRED AND SUBMITTED:	YES ☐	NO ☐	N/A ☐
DUTY STATEMENT REQUIRED AND SUBMITTED:	YES ☐	NO ☐	N/A ☐
SMS DEPLOYMENT CONTRACT UPDATED:	YES ☐	NO ☐	N/A ☐
MINUTE PROGRAM IN RAPS UPDATED:	YES ☐	NO ☐	N/A ☐

Initials

City Official: BHJ

Unit Commander:

LOS ANGELES COUNTY SHERIFF'S DEPARTMENT

CONTRACT CITY LAW ENFORCEMENT SERVICES

SERVICE LEVEL AUTHORIZATION (SH-AD 575)

PUBLIC SAFETY EQUIPMENT

CITY: Rolling Hills **FISCAL YEAR:** 2023-2024

START-UP VEHICLE					
VEHICLE TYPE	YEAR	SERVICE CODE	#	RATE	TOTAL COST

EQUIPMENT					
MDC TYPE	YEAR	SERVICE CODE	#	RATE	TOTAL COST

ALPR WITH INSTALL	YEAR	SERVICE CODE	#	RATE	TOTAL COST
				Total Public Safety Equipment Cost:	$ -

Initials

City Official: EHT

Unit Commander:

CONTRACT CITY LAW ENFORCEMENT SERVICES AND EQUIPMENT
MASTER RATE SHEET

Liability Rate: 12.0%

DSSU Rates

Rank	Relief Factor	Annual Rate	Service Code
Deputy Sheriff	Non-Relief	$ 324,218	310
Deputy Sheriff	40-Hour Unit	$ 356,640	306
Deputy Sheriff	56-Hour Unit	$ 499,296	307
Deputy Sheriff	70-Hour Unit	$ 624,120	308
Special Assignment Deputy	Non-Relief	$ 324,218	278
Catalina Deputy	Non-Relief	$ 295,847	324

DSSU Bonus I Rates

Rank	Relief Factor	Annual Rate	Service Code
Deputy Sheriff, Bonus I	Non-Relief	$ 348,030	305
Deputy Sheriff, Bonus I	40-Hour Unit	$ 382,833	301
Deputy Sheriff, Bonus I	56-Hour Unit	$ 535,966	302
Deputy Sheriff, Bonus I	70-Hour Unit	$ 669,957	303

Growth/Grant Deputy Rates

Rank	Relief Factor	Annual Rate	Service Code
Growth Deputy Generalist	Non-Relief	$ 226,605	335
Growth Deputy Generalist	40-Hour Unit	$ 264,221	573
Growth Deputy Generalist	56-Hour Unit	$ 369,819	582
Growth Deputy Generalist	70-Hour Unit	$ 462,274	583
Growth Special Assignment Deputy	Non-Relief	$ 226,605	204
Growth Deputy Bonus I	Non-Relief	$ 246,740	336
Growth Motor Deputy	Non-Relief	$ 244,174	424
Grant Deputy Generalist	Non-Relief	$ 226,605	386
Grant Special Assignment Deputy	Non-Relief	$ 226,605	312
Grant Deputy Bonus I	Non-Relief	$ 246,740	384
Grant Motor Deputy	Non-Relief	$ 244,174	422

Supplemental Rates

Rank	Relief Factor	Annual Rate	Service Code
Captain	Non-Relief	$ 448,565	321
Lieutenant	Non-Relief	$ 354,112	342
Sergeant, Patrol	Non-Relief	$ 377,917	631
Sergeant, Supplemental	Non-Relief	$ 298,507	353
Motor Sergeant	Non-Relief	$ 314,708	348
Watch Deputy	Non-Relief	$ 242,476	354
Motor Deputy	Non-Relief	$ 324,218	305A
Community Services Assistant (w/ veh)	Non-Relief	$ 79,105	325
Community Services Assistant (w/out veh)	Non-Relief	$ 78,006	327
Crime Analyst	Non-Relief	$ 162,211	329
Custody Assistant	Non-Relief	$ 132,846	331
Forensic ID Specialist II	Non-Relief	$ 200,989	356
Information Systems Analyst I	Non-Relief	$ 176,380	332
Senior Information Systems Analyst	Non-Relief	$ 230,769	334
Intermediate Clerk	Non-Relief	$ 87,140	338
Law Enforcement Technician (w/out veh)	Non-Relief	$ 119,186	339
Law Enforcement Technician (w/ veh)	Non-Relief	$ 120,202	340
Operations Assistant I	Non-Relief	$ 115,142	343
Operations Assistant II	Non-Relief	$ 143,042	344
Operations Assistant III	Non-Relief	$ 163,826	345
Secretary V	Non-Relief	$ 124,601	346
Security Assistant	Non-Relief	$ 65,982	362
Security Officer	Non-Relief	$ 102,289	347
Station Clerk II	Non-Relief	$ 108,540	351
Supervising Station Clerk	Non-Relief	$ 131,222	352
Skynight Observer	Non-Relief	$ 348,030	349

CONTRACT CITY LAW ENFORCEMENT SERVICES AND EQUIPMENT
MASTER RATE SHEET

Vehicle & Equipment Rates

Start-Up Vehicle	Year		Annual Rate	Service Code
B/W Patrol - Ford Explorer PIU Hybrid AWD	2023-2024	$	105,841	378
B/W Tahoe 2WD	2023-2024	$	102,552	399
B/W Motorcycle	2023-2024	$	65,292	381
Solid Patrol Vehicle with Cage (SAO Sergeant/Detectives)	2023-2024	$	100,339	118A
Solid Patrol Vehicle without Cage (SAO Sergeant/Detectives)	2023-2024	$	98,168	118B
Ford Escape SUV Hybrid (White Fleet - CSA, SSO, LET)	2023-2024	$	65,951	203
Ford Explorer PIU Hybrid (Street Package - Executive)	2023-2024	$	80,689	201
Ford F-150 Police Responder BW	2023-2024	$	108,211	205
K-9 Vehicle (B/W Tahoe 2WD)	2023-2024	$	114,050	593

Equipment	Year		Annual Rate	Service Code
MDC New Purchase, Data & Maintenance - CF-31	Year 1	$	8,785	198
MDC New Purchase, Data & Maintenance - GETAC V110	Year 1	$	8,389	164
MDC Data & Maintenance Only	Year 2+	$	1,685	595
ALPR New Install 1st Year (5yr Program)	Year 1	$	5,000	680
ALPR System 2nd Year	Year 2	$	5,000	680A
ALPR System 3rd Year	Year 3	$	5,000	680B
ALPR System 4th Year	Year 4	$	4,650	680C
ALPR System 5th Year	Year 5	$	4,650	680D

Annual revised rates shall be readjusted annually per Sections 8.2 and 11.3 of the MLESA.

LETTER OF UNDERSTANDING
BETWEEN
COUNTY OF LOS ANGELES
AND CONTRACT CITIES ASSOCIATION
REGARDING CONTRACT CITIES LIABILITY TRUST FUND

The Los Angeles County Sheriff's Department (LASD) provides law enforcement services to 42 cities in Los Angeles County (Contract Cities) through the Municipal Law Enforcement Services Agreement (MLESA). The MLESA is negotiated every five years, and we are pleased to have reached agreement with the Contract Cities on a five-year MLESA renewal, effective July 1, 2024. We value our mutual goal and partnership to keep our communities safe.

During the negotiation of the renewed MLESA, both Contract Cities and the County of Los Angeles (County) agreed that continued discussions around the MLESA's indemnification provisions are warranted. The increasing value of legal settlements and jury verdicts, escalating insurance costs, and other factors have raised concerns about the potential for exposure to liability at severe or unanticipated levels.

This Letter of Understanding (LOU) sets forth the framework within which the County and Contract Cities intend to continue discussions around the MLESA's indemnification provisions. It is not intended, nor shall it be construed, to impose any monetary or legal duty upon either party.

I. PURPOSE

The purpose of this LOU is to memorialize the County's and Contract Cities' mutual intent to continue to discuss potential changes to the indemnification provisions contained in Section 5.0 (Indemnification) of the MLESA, and to discuss funding models and practices with respect to liability costs.

In the renewed MLESA, the parties agreed to maintain the indemnification language from the prior MLESA for a period of nine (9) months, with an automatic extension for an additional six (6) months, to allow these continued discussions to take place. Neither the County nor Contract Cities are committing to any particular resolution or agreement resulting from these discussions, and this LOU is not enforceable against either the County or Contract Cities.

DRAFT

II. TOPICS FOR DISCUSSIONS

The County and Contract Cities intend to discuss the specific topic areas identified below. These topic areas are described generally so as not to be unduly prescriptive or limiting. However, the County and Contract Cities do not intend by this LOU to discuss topic areas outside the reasonable scope of the Assumption of Liability Agreement, Indemnity Agreement, Special Indemnity Agreement and those items listed below, and agree that limiting discussion to these topic areas will ensure that discussions proceed in a focused, orderly, and timely manner.

1. Acts or omissions by LASD employees that will not be considered "Contract City business" for the purposes of determining whether the LTF shall pay for resulting litigation costs and liability.

2. Loss control measures to reduce liabilities paid for by the LTF.

3. A formal process to resolve disputes between the County and Contract Cities over responsibility for certain costs of litigation or liability.

4. Responsibility for the costs to defend LASD employees and punitive damages awards under certain circumstances, including but not limited to, when employees are engaged in conduct outside the course and scope of their employment, illegal or sexual activity or with willful disregard for the safety of others.
5. Participation by Contract Cities in the selection of attorneys for Priority 1 & 2 cases, as well as discussions of which firms should be on the panel..

6. Defining what constitutes timely notice by the County to Contract Cities' claims and the ramification of a failure to do so.

7. Litigation cost reduction measures.

8. Addressing the solvency of the LTF.

9. Discuss other fee-for-service models that reflect the County's desire to fully recover its cost of providing MLESA services in Contract Cities, including any liability costs, and the Contract Cities' desire to reduce liability costs associated with the existing MLESA structure.

III. MEETING SCHEDULE AND FORMAT

Within 15 days of the execution of this LOU by all parties, the parties will mutually agree on a meeting schedule. Meetings will take place no less than monthly, either in person or virtually. To foster meaningful and productive discussions, the County and Contract Cities intend to limit their respective number of participants at each meeting to no more than six (6) representatives each. County representatives will include, at a minimum, the Chief Executive Office, LASD, and County Counsel. Contract Cities' representatives will include, at a minimum, Contract Cities Executive Director, the California Joint Powers Insurance Authority, and a representative from the City Managers workgroup. This does not restrict the use of external professionals to assist in any technical analysis beneficial to the discussions.

IV.

COUNTY OF LOS ANGELES

By: _____ Date: _____
Signature

Name: _____

Title: _____

LOS ANGELES SHERIFF'S DEPARTMENT

By: _____ Date: _____
Signature

Name: _____

Title: _____

CONTRACT CITIES ASSOCIATION

By: _____ Date: _____
Signature

Name: _____

Title: _____

DRAFT

32077

EXHIBIT VI

ATTACHMENT 2

ASSUMPTION OF LIABILITY AGREEMENT

THIS AGREEMENT, dated for reference purposes only, on the 14th day of November, 1977, is made and entered into between the County of Los Angeles, sometimes hereinafter referred to as the "County," and the City of San Dimas, sometimes hereinafter referred to as the "City."

RECITALS

(a) City and County have heretofore contracted for the performance of services by County, its officers, agents and employees, and will in the future extend, renew and amend such contracts, and enter into other and further contracts for the performance of services; and

(b) Such contracts are agreements defined under §895 of the Government Code, and pursuant to §895.2 thereof joint and several liability is imposed on the parties; and

(c) Pursuant to §895.4 of the Government Code the parties as a part of the aforementioned agreements may provide for contribution or indemnification upon any liability arising out of the performance of the agreement; and

(d) The County is willing to assume liability and defend and hold the City harmless from any loss, cost or expense caused by the negligent or wrongful acts or omissions of County officers, its agents and employees, occurring in the performance of said agreement; and

///

///

(e) The City is willing to assume liability and defend and hold the County harmless from loss, cost or expenses caused by the negligent or wrongful act or omission of city officers, agents or employees occurring in the performance of agreements between the parties, except as hereinafter provided,

NOW, THEREFORE, IT IS AGREED AS FOLLOWS:

1. The County will assume liability and defend and hold the City harmless from loss, costs or expenses caused by the negligent or wrongful act or omission of County officers, agents and employees occurring in the performance of agreements between the parties hereto to the extent that such liability is imposed on the City by the provisions of §895.2 of the Government Code of the State of California.

2. The City will assume liability and defend and hold the County harmless from loss, costs or expenses caused by the negligent or wrongful act or omission of City officers, agents and employees occurring in the performance of agreements between the parties hereto to the extent that such liability is imposed on the County by the provisions of §895.2 of the Government Code of the State of California. In addition, when liability arises pursuant to §§830, et seq., of the Government Code, by reason of a dangerous condition of public property of the City, the City shall assume liability and defend and hold the County harmless from loss, costs or expenses caused by the negligent or wrongful act or omission of City officers, agents and employees, whether

///

///

arising in the performance of an agreement between the parties hereto, with the exception that the County shall assume liability and defend and hold the City harmless from loss, costs or expenses caused by the negligent or wrongful act or omission of County officers, agents and employees, occurring in the performance of any agreement between the parties hereto where a duty is imposed on the County pursuant to such agreement to provide maintenance or inspection services pertaining to said property. Where such an agreement between a City and County provides that the County will provide at least the same level of maintenance or inspection services that the County provides to unincorporated areas, the County will assume liability and defend and hold the City harmless from loss, costs or expense caused by the negligent or wrongful act or omission of County officers, agents and employees in failing to provide said services in accordance with said agreement.

3. The parties further agree that the Auditor-Controller of the County shall establish a fund for the payment of losses for which the County may be liable under the terms of this agreement, and the County agrees to maintain the fund for the purpose of paying such losses which may occur through its performance under agreements to provide city services to the cities within the County.

///

///

///

///

4. It is understood by the parties that the fund referred to in paragraph 3 above is under the full control of the Board of Supervisors and reappropriation of unencumbered year-end balances in this fund is discretionary with the Board of Supervisors.

5. The City agrees to make payment to the fund, and the County agrees to require each city receiving services under City Service Agreements to also contribute to the fund. Payments towards the total amount of the fund shall be made by the City in such amounts as may be established by the Auditor-Controller according to the policy and procedure established by the Board of Supervisors, and in the same ratio as the cost of services received by the City is to the total cost to the County for its performance of City Service Agreements during each fiscal year. In the event that City should elect to terminate its Service Agreement with the County, its responsibility to contribute to the fund pursuant to this agreement shall be limited to payment of amounts which accrue prior to the effective date of said termination.

6. Each party agrees to fully cooperate with the other and assist the other party hereto in all matters relating to losses covered by the terms of this agreement, and more specifically but not being limited thereby, each party will:

(a) Give prompt notification of all occurrences covered or likely to be covered by the terms hereof, together with the particulars thereof to the other party hereto;

///

(b) If claim is made, or suit is brought against a party on occurrences covered or likely to be covered by the terms hereof, such party shall immediately forward every claim, demand, notice, summons or other process received by it to the other party hereto.

7. Should City agree, stipulate, consent to, or otherwise suffer the granting of any claim, the making of any judgment, order, or other award for damages or other relief against itself or any of its or the County's officers, agents, or employees in any proceeding or action authorized by law involving a matter arising out of the performance by the County of services affected hereby without the prior written consent thereto of the County, the City agrees to indemnify, hold harmless, and defend the County from any loss, cost or expense to it arising from such claim, judgment, or other award irrespective of the legal basis upon which liability may be imposed by such action including liability of the County under the provisions of Section 895.2 of the Government Code.

8. Any party may at its own cost participate in the defense of any suit, or in the prosecution of any appeal affecting matters herein involved where the duty of defense or prosecution is imposed on the other party, and where the other party has consented thereto.

9. This agreement shall apply to and shall be deemed to be a part of all agreements now existing or hereafter

///

///

entered into, including amendments, renewals, or other extensions thereof, wherein the City and County have contracted under circumstances wherein the liability of the City and County is joint and several under §895.2 of the Government Code of the State of California. The provisions of this agreement shall supersede and control over any other provisions inconsistent therewith in any such contract, heretofore or hereafter entered into by and between the parties hereto, unless by specific reference therein this Assumption of Liability Agreement is inapplicable.

10. On the effective date of this agreement that certain agreement entitled "Assumption of Liability Amendment," if any between the parties, is terminated. The effective date of this agreement is the date executed by the parties, but in no event sooner than 12:00 A.M., March 15, 1978, unless the aforementioned Assumption of Liability Amendment should be sooner terminated by the parties, in which event the date of such termination shall be the effective date of this agreement. Upon the effective date of this agreement the same shall continue during the term of any agreement for services to which the same is applicable, unless the County shall sooner elect to terminate this agreement upon thirty days written notice to the City. The County further agrees that this agreement shall be only terminated upon the occurrence of the foregoing, or any one or more of the following events:

///

///

(a) Failure of the City to cooperate with the County as required by this agreement.

(b) Upon the City authorizing any judgment, order or other award for damages without the consent of the County in violation of the terms and provisions of this agreement.

(c) Upon the County's election in its absolute discretion to terminate this Assumption of Liability Agreement as to all cities having such service agreements with the County.

11. To the extent that the County has agreed to indemnify, defend and waive harmless a city, its officers, agents and employees under this agreement, said obligation shall continue to exist during the term of this agreement whether or not there are sufficient funds for such indemnity, defense or hold harmless in the fund established by the Auditor-Controller. It is further understood that the County may also utilize said fund for the purchase of commercial insurance and claims management services and for the payment of other costs to cover the exposures of the County hereunder in whole or in part.

12. On termination by the City of service contract with the County, or upon termination by the County for any cause, the County shall continue to indemnify, defend and hold harmless the City for all claims and losses for which liability is imposed on the County by the terms of this agreement, and

///

///

where arising out of the County's negligent or wrongful act or omission, prior to the effective date of said termination. Said City shall not be entitled to return of any consideration paid by it towards the fund established by the Auditor-Controller on the termination of this agreement.

IN WITNESS WHEREOF, the parties hereto have caused this agreement to be executed by their duly authorized officers the day and year hereinafter set forth.

CITY OF SAN DIMAS

By Marvin Eisler
Mayor

ATTEST this 28th day of February, 1978.

Ruth V. Foster
City Clerk

COUNTY OF LOS ANGELES

By Peter F. Schabarum
Chairman, Board of Supervisors

ATTEST this 22 day of MARCH, 1978.

JAMES S. MIZE, Executive Officer-Clerk of the Board of Supervisors

By Wm Jordan
Deputy

ADOPTED
BOARD OF SUPERVISORS
COUNTY OF LOS ANGELES

109 DEC 27 1977

ATTACHMENT 3

JOINT INDEMNITY AGREEMENT

THIS AGREEMENT, dated for reference purposes on the ___ day of _____, 1991, is made and entered into between the County of Los Angeles, sometimes hereinafter referred to as the "County", and the City of _____, sometimes hereinafter referred to as the "City."

This agreement is entered into based upon the following facts:

(a) City and County have contracted for the performance of services by County, its officers, agents and employees, and may in the future extend, renew and amend such contracts, and enter into other and further contracts for the performance of services, all of which are hereinafter referred to as "service contracts";

(b) Pursuant to Government Code Section 895.6, if the agreements between City and County fail to specify how the responsibility for liability for injuries to persons or property is to be allocated, each entity is to contribute an equal share of the amount of any judgment based on an injury that occurs in the performance of the agreement;

(c) Pursuant to Government Code Section 895.4, the City and County may allocate the ultimate financial responsibility among themselves in whatever manner seems most desirable to them;

(d) County has established the Contract Cities Trust Fund (sometimes hereinafter referred to as "Trust Fund") into which County will deposit designated portions of the funds received from City and other cities as compensation for the performance of services;

(e) County is willing to perform the services for City if City is willing to contribute to the Trust Fund as a part of the compensation for the performance of the services;

(f) City is willing to have County provide the services and to contribute to the Trust Fund as a part of the compensation for the performance of the services;

(g) Utilizing the Trust Fund, County is willing to assume liability and defend and hold City harmless from any loss, cost or expense caused by the negligent or wrongful acts or omissions of County officers, its agents or employees, occurring in the performance of said agreements.

(h) Using its own funds and without contribution from the Trust Fund, City is willing to assume liability and defend and hold County harmless from loss, cost or expenses caused by the negligent or wrongful act or omission of City officers, agents or employees occurring in the performance of agreements between the parties.

NOW, THEREFORE, IT IS MUTUALLY AGREED AS FOLLOWS:

1. Establishment of Trust Fund

City and County agree that the Auditor-Controller of the County shall establish a fund for the payment of losses for which County may be liable under the terms of this agreement. County agrees to maintain the fund, to be known as the Contract Cities Trust Fund, for the purposes set forth in this Agreement.

2. Control of Trust Fund

City and County agree that the Trust Fund is under the full control of County.

3. Payment to Trust Fund

City agrees to make payment to the fund, and County agrees to require each City receiving services under service contracts to also contribute to the fund.

Payments towards the total amount of the fund shall be made by City in such amounts as may be established by County Trust

Fund Administrator with concurrence of Auditor-Controller according to the policy and procedures established by County.

Such payments may be at a rate calculated separately for each specific service provided by County through its performance of service contracts during each fiscal year.

4. Sufficiency and Use of Trust Fund

To the extent that County has agreed to indemnify, defend and hold harmless City, its officers, agents and employees under this agreement, said obligation shall continue to exist during the term of this agreement whether or not there are sufficient funds for such indemnity, defense or hold harmless in the Trust Fund.

If in the discretion of the Trust Fund Administrator the Trust Fund balance is inadequate to fund contract cities liabilities, the Auditor will advance from the County's funds amounts necessary to temporarily finance such liabilities.

City agrees, together with others who will be required to make like contributions, to contribute upon demand by the Trust Fund Administrator such sums as the Trust Fund Administrator determines are necessary to replenish the Trust Fund so that the County's funds may be reimbursed.

The Trust Fund shall reimburse the County's funds for all

such costs temporarily advanced on behalf of the Trust Fund with interest at County treasury rate within one calendar year from the date of the County's advance.

It is further understood that County may also utilize said fund for the purchase of commercial insurance and claims management services and for the payment of other costs to cover all or any part of County's exposures hereunder.

5. Indemnity from the Trust Fund

Utilizing the Trust Fund, County will undertake to investigate, defend and pay any losses, costs, settlement awards, judgments or expenses originating from claims or litigation based or alleged to be based upon the negligent or wrongful act or omission of County officers, agents or employees engaged in the performance of services for City pursuant to the service contracts.

County will not undertake this responsibility if the liability is based or alleged to be based upon the negligent or wrongful act or omission of City, its officers, agents or employees occurring during the performance of the service contracts. Where County contends that the City is partially responsible through its negligence or wrongful act or omission, County shall still undertake the responsibility herein imposed,

but County may, by written notification to City, reserve its right to claim indemnification from the City for that portion of the loss, cost, settlement, award or judgment attributable to the City's negligence or wrongful act or omission.

Except for its contribution to the Trust Fund, City will not be liable for defense costs or for holding County harmless from loss, costs, or expenses caused in whole or in part by the negligent or wrongful act or omission of County, its officers, agents and employees occurring during the performance of the services pursuant to the contracts.

6. Indemnity by City

a. Acts or Omissions

City will undertake to investigate, defend and pay any losses, costs, settlement awards, judgments, or expenses originating from claims or litigation based or alleged to be based in whole or in part upon the negligent or wrongful act or omission of City, its officers, agents or employees occurring during the performance of the service contracts.

b. Dangerous Conditions of City Property

When liability is based or alleged to be based on a dangerous condition of City property pursuant to §830

et. seq. of the Government Code (including, but not limited to, the plan or design of the City property), City shall assume liability and defend and hold County harmless from any loss, cost or expense caused by the negligent or wrongful act or omission of City, its officers, agents or employees.

c. Exception for Maintenance or Inspection of City Property

Where a duty is imposed on County pursuant to a service contract to provide maintenance or inspection services pertaining to City property, County shall utilize the Trust Fund to investigate, defend, and pay any losses, costs, settlement awards, judgments or expenses originating from claims or litigation allegedly based upon the existence of a dangerous condition of City's property as a result of the negligent or wrongful act or omission of County officers, agents or employees in the performance of such service contracts.

7. No Funding of City's Unilateral Settlements or Litigation

Should City agree, or stipulate or consent to the settlement of any claim or action, the making or entry of any judgment, order or other award for damages or for other relief against itself or any of its officers, agents or employees or against County or its officers, agents or employees in any proceeding or action authorized by law, involving a matter arising out of the performance by County pursuant to the service contracts, without the prior written consent thereto of County, then City agrees to indemnify, hold harmless and defend County from any loss, cost or expense sustained by County arising from such claim, judgment or other award irrespective of the legal basis upon which liability may be imposed by such claim or action, including liability of County under the provision of §895.2 of the Government Code.

8. Cooperation in Assumption of Liability

City and County agree to fully cooperate and assist each other in all matters relating to losses covered by the terms of this agreement.

More specifically, but not limited thereby, each party will:

(a) In the event of a claim or suit or an occurrence likely to involve a claim or suit covered by this agreement, give prompt

written notice to the other party. Written notice shall contain the name and address of the person or organization sustaining injury or damage, and of any witnesses, as well as the time, place and circumstances of the occurrence.

(b) If claim is made or suit is brought against a party on occurrences covered or likely to be covered by the terms hereof, such party shall immediately forward every claim, demand, notice, summons or other process received by it to the other party.

c) Cooperate with the other party and, upon the other party's request assist in the processing of suits and enforcing any right of contribution or indemnity against any person or organization who may be liable to the other party for injury or damage covered by this agreement; attend upon request hearings and trials, assist in securing and giving of evidence and obtaining the attendance of witnesses.

9. Participation in Litigation

Any party may as its own cost participate in the defense of any suit, or in the prosecution of any appeal affecting matters herein involved where the duty of defense or prosecution is imposed on the other party, and where the other party has consented thereto.

10. Application of Agreement to Other Agreements

This agreement shall apply to and shall be deemed to be a part of all agreements now existing or hereafter entered into including amendments, renewals, or other extensions thereof, wherein City and County have contracted under circumstances wherein the liability of City and County is joint and several under §895.2 of the Government Code of the State of California.

11. Control over Prior Agreements

Any references in service contracts to the "Assumption of Liability Agreement" shall be deemed to be to this Agreement.

The provisions of this agreement shall supersede and control over any other provisions inconsistent herewith in any such contract, and control future agreements between the parties hereto unless by specific reference therein this Joint Indemnity Agreement is made inapplicable.

12. Termination of Agreement

This agreement shall continue during the term of any service contract between City and County unless:

(a) County elects to terminate this agreement upon thirty days written notice to City.

(b) Upon County's election, if City fails to cooperate with County as required by this agreement.

(c) Upon County's election if City authorizes any judgment, order or other award for damages without the consent of County in violation of the terms and provisions of this agreement.

(d) Upon County's election in its absolute discretion to terminate this Joint Indemnity Agreement as to all cities having such service contracts with County.

On the termination of this agreement, City shall not be entitled to return of any consideration paid by it towards the Trust Fund. Termination of this agreement shall not relieve City of its obligation to make contributions as required by Paragraph 4.

13. Termination of Service Contracts Between County and City

On termination by City of service contract with County or termination of said contract by County for any cause, County and/or City shall continue to defend, indemnify and hold harmless the other party for all claims and losses pursuant to the terms of this agreement arising prior to the effective date of said termination.

IN WITNESS WHEREOF, the parties hereto have caused this agreement to be executed by their duly authorized officers the day and year hereinafter set forth.

CITY OF

By_____
Mayor

ATTEST this ____ day of ____, 1991

By_____
City Clerk

COUNTY OF LOS ANGELES

By_____
Chairman, Board of Supervisors

ATTEST this ___ day of _____, 1991

LARRY J. MONTEILH
Executive Officer
Board of Supervisors

By_____
Deputy

APPROVED AS TO FORM:

DE WITT W. CLINTON
County Counsel

By_____
Deputy

9-12.JIA

COUNTY-CITY SPECIAL INDEMNITY AGREEMENT

THIS AGREEMENT ("Agreement"), dated for reference purposes on the _____day of _____, 2009, is made and entered into between the County of Los Angeles, hereinafter referred to as the "County," and the Cities identified in Recital G below, hereinafter cumulatively referred to as the "Cities."

RECITALS

A. Cities, and each of them, and County have heretofore contracted for the performance of law enforcement services to be provided by the County, its officers, agents and employees, known as "Municipal Law Enforcement Services Agreements" which contracts the parties may in the future extend, renew and amend, and enter into other and further contracts for the performance of such services (hereinafter referred to as "MLESA"); and

B. Cities and County have heretofore contracted for the indemnification of the Cities by the County, utilizing the Liability Trust Fund ("LTF") for the acts and omissions committed by the County's employees in the course and scope of providing services under the MLESA agreements, more particularly described as the Joint Indemnity Agreements or Assumption of Liability Agreements (hereinafter referred to as "Joint Indemnity Agreements") which have remained in full force and effect to the present time; and

C. In accordance with the Joint Indemnity Agreements, the County established the LTF, as provided in those agreements. In accordance with the Joint Indemnity Agreements, the Cities, and each of them, are required

to pay monies into the LTF. The monies in the LTF are used to reimburse the County for claims, losses, costs and expenses it incurs for which indemnification is provided in the parties' MLESA and/or Joint Indemnity Agreements; and

D. The County withdrew sums from the LTF for the purpose of reimbursing itself for its payment of settlement of claims related to sexual assaults committed by a deputy sheriff (Gonzales) in the years 2002 and 2003 (the "Claims"); and

E. A dispute has arisen between the parties regarding the circumstances under which the County may utilize the funds in the LTF for claims arising from sexual assaults committed by deputy sheriffs employed by the County ("Sexual Assaults"); and

F. The parties desire to continue the Joint Indemnity Agreements and MLESA agreements, as amended, modified and supplemented from time to time. As further consideration to the Cities, the County is willing to reimburse the LTF for a portion of the sums that are used or may be used by it from the LTF for claims, losses, costs or expenses arising out of certain Sexual Assaults, as defined in Section 2 below, occurring in the performance of the MLESA agreements on the terms and in the manner provided in this Agreement.

G. The Cities that are a party to this Agreement are as follows:

City of Agoura Hills
City of Artesia
City of Avalon
City of Bellflower
City of Bradbury
City of Calabasas

City of Carson
City of Cerritos
City of Commerce
City of Compton
City of Diamond Bar
City of Duarte
City of Hawaiian Gardens
City of Hidden Hills
City of Industry
City of La Canada
City of La Habra Heights
City of La Mirada
City of La Puente
City of Lakewood
City of Lancaster
City of Lawndale
City of Lomita
City of Lynwood
City of Malibu
City of Norwalk
City of Palmdale
City of Paramount
City of Pico Rivera
City of Rancho Palos Verde
City of Rolling Hills
City of Rolling Hills Estate
City of Rosemead
City of San Dimas
City of Santa Clarita
City of South El Monte
City of Temple City
City of Walnut
City of West Hollywood
City of Westlake Village

NOW, THEREFORE, for good and valuable consideration, receipt of which is acknowledged, it is mutually agreed as follows:

AGREEMENT

1. Effective Date.

This Agreement shall be effective as of July 1, 2009. The foregoing notwithstanding, this Agreement shall apply to any claims notice of which is first given to the Liability Trust Fund Oversight Committee after the effective date of this agreement, regardless of the date of occurrence. For purposes of this Agreement "notice" shall mean notification to the Chief Executive Officer of the California Joint Powers Insurance Authority and the Executive Director of the California Contract Cities Association, unless otherwise instructed in writing.

2. Indemnity by the County to the City.

The parties agree that the maximum liability of the LTF for any losses, claims, costs or expenses related to certain Sexual Assaults, as herein below defined, by deputies or other peace officers in the employ of the County shall be one-half (1/2) of any settlement, judgment or award for such assaults and the costs of defense, including attorneys fees, for such claims or lawsuits. In the event that a withdrawal is made by the County from the LTF for any liability related to certain Sexual Assaults by deputies or other peace officers, as herein below defined, the County shall reimburse the LTF, or, in the event that it has not made a withdrawal of funds from the LTF it shall assume the responsibility to pay from its own funds, one-half (1/2) of any amounts necessary to satisfy any judgment, award or settlement not otherwise covered by insurance, if there is any, together with costs of defense, including attorneys fees, under the following circumstances:

a. A felony judgment of criminal conviction is entered in a state or federal court based upon the same facts as the claim; and

b. The felony judgment of criminal conviction is based upon an act of rape, sodomy, oral copulation or other sexual penetration of a person;

For purposes of calculating the amount that the County is obligated to pay into the LTF under this Agreement, any amount paid by an insurance carrier directly to a claimant on a claim which is subject to this Agreement shall not be deemed to have been paid from the LTF.

For purposes of calculating the amount that the County is obligated to pay into the LTF under this Agreement, any amount paid from the LTF on a claim

which is subject to this Agreement but which is reimbursed to the LTF by an insurance carrier shall not have been deemed paid from the LTF.

Nothing herein creates an obligation upon the Cities, or any of them, or any other entity to acquire, have or maintain any policy of insurance.

3. Term of and Application to Other Agreements.

This Agreement shall apply to all MLESA agreements now existing or hereafter entered into, including amendments, renewals or other extensions thereof. This Agreement shall serve to supplement the Joint Indemnity Agreements with respect to the single subject matter addressed herein.

Nothing herein shall be deemed to change, modify, alter, amend, or substitute any term, right, obligation or condition set forth in an MLESA, as amended or modified, from time to time.

4. Termination of Service Contracts Between County and Cities.

This Agreement shall continue in effect until the last of any MLESA or similar agreement is lawfully terminated in accordance with its terms. Such termination shall not relieve County or City for any obligations set forth in such MLESA agreement relating to obligations upon termination of such agreement and this Agreement to any claims related to a Sexual Assault.

5. Release of the Claims.

The Cities and each of them hereby waive, release and relinquish any claim they may have for the reimbursement of the sums withdrawn by the County with respect to the Claims. The County hereby waives, releases and relinquishes any right or claim it may have for reimbursement of any sums it has or may have

paid or incurred with regard to any Sexual Assault occurring prior to the effective date of this Agreement.

6. Further Assurances.

Each of the parties hereto agrees to execute and deliver any and all additional papers and documents, and to do any and all acts reasonably necessary in connection with the performance of its obligations hereunder and to carry out the intent of the parties hereto.

7. Non-Admission of Liability.

Each of the parties hereto agrees that nothing contained or incorporated herein shall be deemed as an admission of liability with respect to any matter, thing, or dispute whatsoever.

8. Entire Agreement.

This Agreement with regard to the use of LTF funds by the County for claims arising out of Sexual Assaults, and the other agreements between the parties referenced herein, shall constitute the entire agreement between the parties hereto with respect to the subject matter hereof, and shall supersede all prior and contemporaneous agreements, representations of the parties concerning the subject matter hereof and the terms applicable thereto.

9. Amendment.

This Agreement may not be supplemented, modified or amended in any manner, except by an instrument in writing stating that it is a supplement, modification or amendment of this Agreement and signed by each of the parties hereto.

10. Waiver.

No waiver of any of the provisions of this Agreement shall be deemed or constitute a waiver of any other provision, whether or not similar, nor shall any wavier constitute a continuing wavier. No waiver shall be binding unless executed in writing by the party making the waiver.

11. Counterparts.

This Agreement may be executed by one or more separate counterparts, each of which, when so executed shall together constitute one and the same instrument. A copy transmitted electronically or by facsimile shall be deemed effective as an original.

12. Captions.

The captions appearing in this Agreement are descriptive only and for convenience of reference. Should there be any conflict between any such caption and the terms of this Agreement, the latter shall control and govern the construction of this Agreement.

13. Constructions and Interpretation.

The parties have participated equally in the preparation of this Agreement, which shall be construed and interpreted simply and fairly and not strictly for or against any party.

14. Recitals.

The Recitals set forth in this Agreement are incorporated herein by reference and made a part hereof.

IN WITNESS WHEREOF, the parties hereto have caused this Agreement to be executed by their fully authorized officers the day and year hereinafter set forth.

COUNTY OF LOS ANGELES

By_____
DON KNABE
Chairman, Board of Supervisors

ATTEST:
SACHI HAMAI
Executive Officer-Clerk
Board of Supervisors

By _____
Deputy

APPROVED AS TO FORM:
ROBERT E. KALUNIAN
Acting County Counsel

By _____

(Signatures continued)

CITY OF AGOURA HILLS

By _____

MAYOR

ATTEST:

By_____
City Clerk

APPROVED AS TO FORM:
CITY ATTORNEY

By _____

CITY OF ARTESIA

By _____

MAYOR

ATTEST:

By_____
City Clerk

APPROVED AS TO FORM:
CITY ATTORNEY

By _____

(Signatures Continued)

CITY OF AVALON

By _____

MAYOR

ATTEST:

By_____
City Clerk

APPROVED AS TO FORM:
CITY ATTORNEY

By _____

CITY OF BELLFLOWER

By _____

MAYOR

ATTEST:

By_____
City Clerk

APPROVED AS TO FORM:
CITY ATTORNEY

By _____

(Signatures Continued)

CITY OF BRADBURY

By _____

MAYOR

ATTEST:

By_____
City Clerk

APPROVED AS TO FORM:
CITY ATTORNEY

By _____

CITY OF CALABASAS

By _____

MAYOR

ATTEST:

By_____
City Clerk

APPROVED AS TO FORM:
CITY ATTORNEY

By _____

(Signatures Continued)

CITY OF CARSON

By _____

MAYOR

ATTEST:

By_____
City Clerk

APPROVED AS TO FORM:
CITY ATTORNEY

By _____

CITY OF CERRITOS

By _____

MAYOR

ATTEST:

By_____
City Clerk

APPROVED AS TO FORM:
CITY ATTORNEY

By _____

(Signatures Continued)

CITY OF COMMERCE

By _____

MAYOR

ATTEST:

By_____
City Clerk

APPROVED AS TO FORM:
CITY ATTORNEY

By _____

CITY OF COMPTON

By _____

MAYOR

ATTEST:

By_____
City Clerk

APPROVED AS TO FORM:
CITY ATTORNEY

By _____

(Signatures Continued

CITY OF DIAMOND BAR

By _____

MAYOR

ATTEST:

By_____
City Clerk

APPROVED AS TO FORM:
CITY ATTORNEY

By _____

CITY OF DUARTE

By _____

MAYOR

ATTEST:

By_____
City Clerk

APPROVED AS TO FORM:
CITY ATTORNEY

By _____

(Signatures Continued)

CITY OF HAWAIIAN GARDENS

By _____

MAYOR

ATTEST:

By_____
City Clerk

APPROVED AS TO FORM:
CITY ATTORNEY

By _____

CITY OF HIDDEN HILLS

By _____

MAYOR

ATTEST:

By_____
City Clerk

APPROVED AS TO FORM:
CITY ATTORNEY

By _____

(Signatures Continued)

CITY OF INDUSTRY

By _____

MAYOR

ATTEST:

By_____
City Clerk

APPROVED AS TO FORM:
CITY ATTORNEY

By _____

CITY OF LA CANADA

By _____

MAYOR

ATTEST:

By_____
City Clerk

APPROVED AS TO FORM:
CITY ATTORNEY-

By _____

(Signatures Continued)

CITY OF LA HABRA HEIGHTS

By _____

MAYOR

ATTEST:

By_____
City Clerk

APPROVED AS TO FORM:
CITY ATTORNEY

By _____

CITY OF LA MIRADA

By _____

MAYOR

ATTEST:

By_____
City Clerk

APPROVED AS TO FORM:
CITY ATTORNEY

By _____

(Signatures Continued)

CITY OF LA PUENTE

By _____

MAYOR

ATTEST:

By_____
City Clerk

APPROVED AS TO FORM:
CITY ATTORNEY

By _____

CITY OF LAKEWOOD

By _____

MAYOR

ATTEST:

By_____
City Clerk

APPROVED AS TO FORM:
CITY ATTORNEY

By _____

(Signatures Continued)

CITY OF LANCASTER

By _____

MAYOR

ATTEST:

By_____
City Clerk

APPROVED AS TO FORM:
CITY ATTORNEY

By _____

CITY OF LAWNDALE

By _____

MAYOR

ATTEST:

By_____
City Clerk

APPROVED AS TO FORM:
CITY ATTORNEY

By _____

(Signatures Continued)

CITY OF LOMITA

By _____

MAYOR

ATTEST:

By_____
City Clerk

APPROVED AS TO FORM:
CITY ATTORNEY

By _____

CITY OF LYNWOOD

By _____

MAYOR

ATTEST:

By_____
City Clerk

APPROVED AS TO FORM:
CITY ATTORNEY

By _____

(Signatures Continued)

CITY OF MALIBU

By _____

MAYOR

ATTEST:

By_____
City Clerk

APPROVED AS TO FORM:
CITY ATTORNEY

By _____

CITY OF NORWALK

By _____

MAYOR

ATTEST:

By_____
City Clerk

APPROVED AS TO FORM:
CITY ATTORNEY

By _____

(Signatures Continued)

CITY OF PALMDALE

By _____

MAYOR

ATTEST:

By_____
City Clerk

APPROVED AS TO FORM:
CITY ATTORNEY

By _____

CITY OF PARAMOUNT

By _____

MAYOR

ATTEST:

By_____
City Clerk

APPROVED AS TO FORM:
CITY ATTORNEY

By _____

(Signatures Continued)

CITY OF PICO RIVERA

By _____

MAYOR

ATTEST:

By_____
City Clerk

APPROVED AS TO FORM:
CITY ATTORNEY

By _____

CITY OF RANCHO PALOS VERDE

By _____

MAYOR

ATTEST:

By_____
City Clerk

APPROVED AS TO FORM:
CITY ATTORNEY

By _____

(Signatures continued)

CITY OF ROLLING HILLS

By _____

MAYOR

ATTEST:

By_____
City Clerk

APPROVED AS TO FORM:
CITY ATTORNEY

By _____

CITY OF ROLLING HILLS ESTATE

By _____

MAYOR

ATTEST:

By_____
City Clerk

APPROVED AS TO FORM:
CITY ATTORNEY

By _____

(Signatures continued)

CITY OF ROSEMEAD

By _____

MAYOR

ATTEST:

By_____
City Clerk

APPROVED AS TO FORM:
CITY ATTORNEY

By _____

CITY OF SAN DIMAS

By Curtis W Morris

MAYOR

ATTEST:

By_____
City Clerk

APPROVED AS TO FORM:
CITY ATTORNEY

By_____

(Signatures continued)

CITY OF SANTA CLARITA

By _____

MAYOR

ATTEST:

By_____
City Clerk

APPROVED AS TO FORM:
CITY ATTORNEY

By _____

CITY OF SOUTH EL MONTE

By _____

MAYOR

ATTEST:

By_____
City Clerk

APPROVED AS TO FORM:
CITY ATTORNEY

By _____

(Signatures continued)

CITY OF TEMPLE CITY

By _____

MAYOR

ATTEST:

By_____
City Clerk

APPROVED AS TO FORM:
CITY ATTORNEY

By _____

CITY OF WALNUT

By _____

MAYOR

ATTEST:

By_____
City Clerk

APPROVED AS TO FORM:
CITY ATTORNEY

By _____

(Signatures continued)

CITY OF WEST HOLLYWOOD

By _____

MAYOR

ATTEST:

By_____
City Clerk

APPROVED AS TO FORM:
CITY ATTORNEY

By _____

CITY OF WESTLAKE VILLAGE

By _____

MAYOR

ATTEST:

By_____
City Clerk

APPROVED AS TO FORM:
CITY ATTORNEY

By _____
(End)

City of Rolling Hills INCORPORATED JANUARY 24, 1957

Agenda Item No.: 14.A
Mtg. Date: 06/10/2024

TO: HONORABLE MAYOR AND MEMBERS OF THE CITY COUNCIL

FROM: CHRISTIAN HORVATH, CITY CLERK / EXECUTIVE ASSISTANT TO CITY MANAGER

THRU: KARINA BAÑALES, CITY MANAGER

SUBJECT: RECEIVE AND FILE A VERBAL REPORT REGARDING HOMEOWNERS INSURANCE RENEWAL CHALLENGES AND THE CALIFORNIA INSURANCE COMMISSION'S EFFORT TO RESOLVE (MAYOR MIRSCH)

DATE: June 10, 2024

BACKGROUND:
None.

DISCUSSION:
None.

FISCAL IMPACT:
None.

RECOMMENDATION:
Receive and file.

ATTACHMENTS:
CL_AGN_240610_CC_051524_CAConsumerAlert.pdf

Commissioner Lara Testifies on Progress Toward Stabilizing Insurance Market

May 15, 2024 — Today Insurance Commissioner Ricardo Lara informed members of the Assembly Insurance Committee about significant progress toward California's largest insurance reform in 30 years. In prepared remarks, he detailed next steps to implement his comprehensive Sustainable Insurance Strategy in concert with support from the Governor and Legislature through the budget process.

The following is an excerpt of Commissioner Lara's remarks:

"Since last September, my Department has been working diligently on ambitious reforms designed to stabilize our state's insurance marketplace. I am thankful for my staff and their incredible commitment to this bold, comprehensive strategy that will modernize our state's insurance market, especially with the growing threat of climate change."

"I want to address the questions everyone always asks up front: When will our work be complete? And when will Californians start to see the benefits?"

"I stand with our Governor's remarks at his news conference — that time is of the essence. I appreciate his strong support of my strategy and his continued commitment to ensure my Department has the support and resources we need to implement a strong, lasting reform."

"My answer is: We will finish our regulatory work this year, and Californians are already seeing benefits."

"We need to be thorough, thoughtful, and deliberate. I do not want another insurance commissioner to be back in front of you in 5 or 10 years because these regulations could not be implemented -- and do not meet the mandate of Proposition 103."

PROPOSITION 103

"The purpose of Prop. 103 is four-fold: to protect consumers from arbitrary insurance rates and practices, to encourage a competitive insurance marketplace, to provide for an accountable Insurance Commissioner, and to keep insurance fair, available, and affordable for all Californians."

"Under Prop. 103, insurance companies are not required to write policies. That was upheld in the Garamendi precedent. Underwriting mandates will not prevent insurance companies from further retreating."

"Let me put our work into perspective: We are creating entirely new laws and new procedures from the ground up, and we need to make sure we have all those in place. Our entire team has been continuously engaged and working hard throughout this insurance crisis -- and Californians are already seeing results. Here are some notable updates since we last met:

OUTCOMES

"Just yesterday, Farmers announced that it will reopen several of its commercial coverage lines, including for homeowners associations, apartments, and condominiums. Farmers is California's largest domiciled insurance company and second largest homeowners writer."

"This decision is a direct result of my Department's approval of its commercial rate filing. My Department has also approved three of Farmers' homeowners rate filings in the last year as the company continues to write homeowners policies across the state."

"Last week, we heard that Mercury Insurance Company is working with Tokio Marine to pick up the bulk of its personal homeowners insurance business. Mercury is another California-based company that has not stopped writing new homeowners policies. And Tokio Marine continues to write commercial coverage."

"My staff just approved CSAA Insurance Exchange's homeowners insurance rate filing last Friday. This ensures that CSAA can continue to write homeowners policies under the Triple-A Northern California brand. Earlier this year, my Department approved a significant homeowners rate filing for Triple-A South, so it can continue to write homeowners policies throughout Southern California."

"And during my Department's catastrophe modeling workshop last month, an Allstate executive testified that it will end its pause on new homeowners business in California and begin writing in virtually every corner of the state when our strategy is implemented."

"In fact, every Top 10 homeowners insurance company in California has had a justified rate increase in the past five months according to the rules under Prop. 103. This underscores the tremendous urgency that my Department is showing during this crisis."

"These are signs of progress. However, we are not going to declare success prematurely, or be reactive to every insurance announcement or headline. We all are living in a time of uncertainty. I know that this is frustrating for anyone who is trying to buy or sell a home, or worried about whether they can even afford the insurance coverage they need as we face another fire season. We are already monitoring the current fire in San Bernardino County. That is the reality of our situation."

"You've heard this before but it bears repeating: We are on our way to enacting the **state's largest insurance reform in 30 years** since the passage of Prop. 103 in 1988. Prop. 103 was less than two pages of text. It took years of regulatory work, dozens of rulemakings, and even scores of litigation to make that landmark initiative a reality."

"Now we are facing the accumulated stress of decades of long-needed reforms and neglected decisions. For years, insurance companies submitted rate requests less than what they need largely because of the stagnant intervenor process. We are compressing decades of this deferral and delay into a one-year timeline of action. We have been surviving with 20th century regulations for 21st century problems. That cannot continue."

"There are others who are still trying to figure out if there is even an insurance crisis or just denying that there is an emergency to begin with. News flash: This is what an insurance crisis looks like."

MOVING FORWARD

Looking ahead, my Department is finalizing new regulations to allow the use of forward-looking catastrophe models in rate filings. This will help increase insurance availability in wildfire distressed areas and reduce reliance on the FAIR Plan, which has become a large percentage of policies in rural areas. In July, we plan to introduce proposed regulation text to allow homeowners and commercial insurance companies to incorporate the net cost of reinsurance in their rate filings. Reinsurance is a

critical component of how insurance companies manage their risk, and allowing these costs to be included in rate filings will support greater insurance availability.

We are also working on modernizing the FAIR Plan, which has been neglected for many years. By July, I plan to amend the FAIR Plan's Plan of Operation to increase coverage limits for larger homeowners associations, condo associations, farms, and other businesses, while ensuring the financial sustainability of the Plan. This modernization effort includes improving customer service responsiveness and ensuring that the FAIR Plan can fulfill its statutory role of providing coverage to all who need it.

In February, my Department published a "complete rate application" regulation to create clarity for all participants in the rate review process. This regulation is a critical part of reducing unnecessary delays and ensuring that rate filings are reviewed more quickly.

Last week, the Governor announced a new legislative proposal to expedite my Department's insurance rate filing process. This proposal aims to provide more resources for thorough review within the current 60-day timeline prescribed under Proposition 103, with provisions for 30-day extensions when necessary. This proposal will help ensure that insurance companies provide complete information upfront, allowing for timely and informed decisions on rate filings.

To increase public participation and transparency in the Proposition 103 intervenor process, my Department launched a new webpage that explains how the process works and provides access to petitions filed by intervenors, as well as the Department's responses and compensation awarded.

City of Rolling Hills INCORPORATED JANUARY 24, 1957

Agenda Item No.: 15.A
Mtg. Date: 06/10/2024

TO: **HONORABLE MAYOR AND MEMBERS OF THE CITY COUNCIL**

FROM: **JOHN SIGNO, DIRECTOR OF PLANNING & COMMUNITY SERVICES**

THRU: **KARINA BAÑALES, CITY MANAGER**

SUBJECT: **PRESENTATION REGARDING OPEN FIRE PITS WITHIN CITY LIMITS**

DATE: **June 10, 2024**

BACKGROUND:
Fire risks on the Palos Verdes Peninsula are heightened due to a confluence of high temperatures, widespread dry vegetation, and strong coastal winds. Small brush fires are regular occurrences on the hill, igniting multiple times a year during the summer and fall. Most brush fires are extinguished relatively quickly, but large wildfires have a history of ravaging Peninsula communities. In 1973, a large wildfire was sparked by two children playing with illegal firecrackers--more than 900 acres were burned, and 12 homes in Rolling Hills were destroyed. In 2009, a fire of unknown origin burned 235 acres, lasting for two days and causing damage to six Rolling Hills homes leading to 1,200 people being forced to evacuate (Attachment 1).

Due to the City's open space areas, dense vegetation, and 1,500 acres of land in the adjacent Palos Verdes Peninsula Land Conservancy (PVPLC), the Los Angeles County Fire Marshal has deemed the City of Rolling Hills a "Very High Fire Hazard" local responsibility area (LRA) zone (Attachment 2). Additionally, Rolling Hills is located within FEMA's "Very High" Wildfire Risk Index score zone and the California Public Utility Commission's "Tier-2 Elevated Fire-Threat Area" zone.

Municipal and Los Angeles County Codes
The Fire Code of the Los Angeles County Code was adopted in the City's Municipal Code as the "Fire Code of the City of Rolling Hills." An email from the County of Los Angeles Fire Department clarifies how the Fire Code governs firepits (Attachment 3) and is summarized below:

Operational Permits, Section 105.5.34: Recreational fires are a type of open burning with a total fuel area that is 3 feet or less in diameter and 2 feet or less in height, used for pleasure, religious, ceremonial, cooking, warmth, or similar purposes. Recreational fires are exempt from operational permits, given that the fire is not located in a Wildlife Urban Interface Area (WUI) or a Fire Hazard Severity Zone (FHSZ).

Rolling Hills is not in a WUI, but we are classified as a "Very High Fire Hazard" zone under the LA County Fire Marshal's FHSZ (see Attachment 2). As such, the following must be met to gain permit exemption:

- The recreational fire is located on private property with consent from the owner.
- No rubbish is burned.
- It is not for commercial or industrial use.
- It is in compliance with Sections 307.4 and 307.5 (detailed below).

"Activities in Wildfire Risk Areas" Permits, Section 326.2: These permits are required for conducting certain activities in a wildfire risk area, including recreational open burning, using stands for cooking, or other activities that could provide a source of ignition (Attachment 3).
Location, Sections 307.4.2 and 307.4.3: Recreational fires may not be conducted within 25 feet of a structure or combustible material. Portable outdoor fireplaces are exempt from location restrictions if used at a one- or two-family dwelling. Portable outdoor fireplaces are defined as portable, outdoor, solid-fuel-burning fireplaces that may be open in design or may have a small hearth opening and a short chimney or chimney opening on the top (Attachment 3).
Attendance, Section 307.5: Open burning, bonfires, recreational fires, and portable outdoor fireplaces must be constantly attended until the fire is extinguished. At least one portable fire extinguisher or other approved on-site fire-extinguishing equipment--such as dirt, sand, water barrels, garden hoses, or a water truck--must be available for immediate utilization (Attachment 3).

LA County Code Requirements Summary
Portable Solid-Fuel Burning Outdoor Fireplaces: No location requirements or permits are required for portable outdoor fireplaces. A fire extinguisher must be located nearby.

Portable Gas-Burning Outdoor Fireplaces: The Fire Code does not address portable gas-burning outdoor fireplaces.

Fixed Outdoor Decorative Fires: The LA County Fire Code does not address decorative fires using gas-burning only. We were directed to refer to the LA County Mechanical Code, referring to them as "Outdoor Open Flame Decorative Appliances" in 2022 CMC Section 932.0. In the code, owners must comply with the manufacturer's instructions, maintain clearance of at least 36 inches of combustible materials from the sides, and it may not be located underneath overhead combustible materials (Attachment 2).

Firepits: Operational permits are not required, given the firepit meets the size standards for a recreational fire and is located further than 25 feet from any structure or combustible material. A fire extinguisher must be located nearby.

DISCUSSION:
Current Permitting and Approvals Process
When a firepit is included in a set of plans, City staff checks for the square footage of the firepit to calculate the total square footage of the project. Staff may also ask for firepits to be located away from flammable areas as a best practice and to keep the firepit within the designated patio area.

Once the project is approved by the Planning Department, Los Angeles County's Building & Safety Department is responsible for flagging potential violations. Issues would be sent to the

applicant for corrections, and the applicant would be referred to the Los Angeles County Fire Department for Fire Code requirements, if applicable. In conversation with LA County Building & Safety, however, staff was informed the only aspect of firepits that are enforced is the requirement for a plumbing permit for gas lines associated with gas-burning firepits. Wood-burning firepits are not allowed. Firepits, on their own, would not be directly referred to the Fire Department. Only larger projects, such as a new residence with a backyard firepit, would be referred.

The LA County Fire Code has restrictions on certain types of firepits, but they fail to encompass the full range of appliances that could spark fires. Additionally, the Los Angeles County Building & Safety Department is not consistently enforcing the Fire Code, so issues that should be corrected to meet the Fire Code are not being reviewed.

Policies of Other Peninsula Cities
Like the City of Rolling Hills, the cities of Rancho Palos Verdes, Rolling Hills Estates, and Palos Verdes Estates have all adopted the Los Angeles County Fire Code as part of their municipal code. None of the planning departments for the other cities have specific procedures for approving firepits or other appliances that spark outdoor fires, as building & safety departments are generally responsible for those reviews. Rolling Hills is the only city that uses Los Angeles County's Building & Safety Department for building permits since Rancho Palos Verdes and Palos Verdes Estates have their own building & safety departments, and Rolling Hills Estates uses Willdan Engineering.

Conclusion
The City of Rolling Hills, with its open spaces, dense vegetation, dry climate, and proximity to large nature preserves, has been designated by the California Fire Marshal as a "Very High Fire Hazard" zone. Additionally, there is a significant history of wildfires disrupting and destroying Rolling Hills homes. The Los Angeles County Fire Code, which was adopted as Rolling Hills' Fire Code, includes some safety requirements for firepits and other outdoor appliances that can spark fires. After a project is approved by Rolling Hills' Planning Department, the Los Angeles County Building & Safety Department determines if Fire Department review is needed for compliance with the Fire Code. However, referrals to the Fire Department are not always made, especially for smaller projects.

Staff seeks City Council direction on the next steps. The City Council may request the Planning Commission to consider amending the Zoning Ordinance to include requirements for new firepits and other outdoor appliances that could start a wildfire. A code amendment may include, but are not limited to, requirements for distances to structures, amount of hardscape surrounding the firepit, and possession of a nearby fire extinguisher. This would enable the Planning Department to more effectively review plans for fire safety.

FISCAL IMPACT:
None.

RECOMMENDATION:
Receive and file or provide direction to staff.

ATTACHMENTS:
Attachment 1: Daily Breeze - 1973 and 2009 Rolling Hills Fire.pdf
Attachment 2: CL_AGN_CC_240610_15_Matters_Staff_FireDeptEmail_240603.pdf
Attachment 3: Bonfire Recreational-Fire Permit Triggers 2023 LACFC.pdf

South Bay History

The Daily Breeze's Sam Gnerre looks at the way we were in the South Bay

The most destructive brush fire in South Bay history

Posted on **November 7, 2014** by **Sam Gnerre**

— A helicopter makes an aerial water drop, left center, in this view of the Rolling Hills fire on June 22, 1973. Looking toward Rolling Hills from Rancho Palos Verdes. (Daily Breeze staff photo)

Two boys aged 12 and 13 playing with homemade firecrackers made from shotgun powder found in a garage inadvertently started the most destructive brush fire in South Bay History.

The pair set off the explosive flash powder mixture in a vacant lot on Whitley Collins Drive, between Highridge and Crest roads near Rolling Hills, at about 2:30 p.m. on Friday, June 22, 1973.

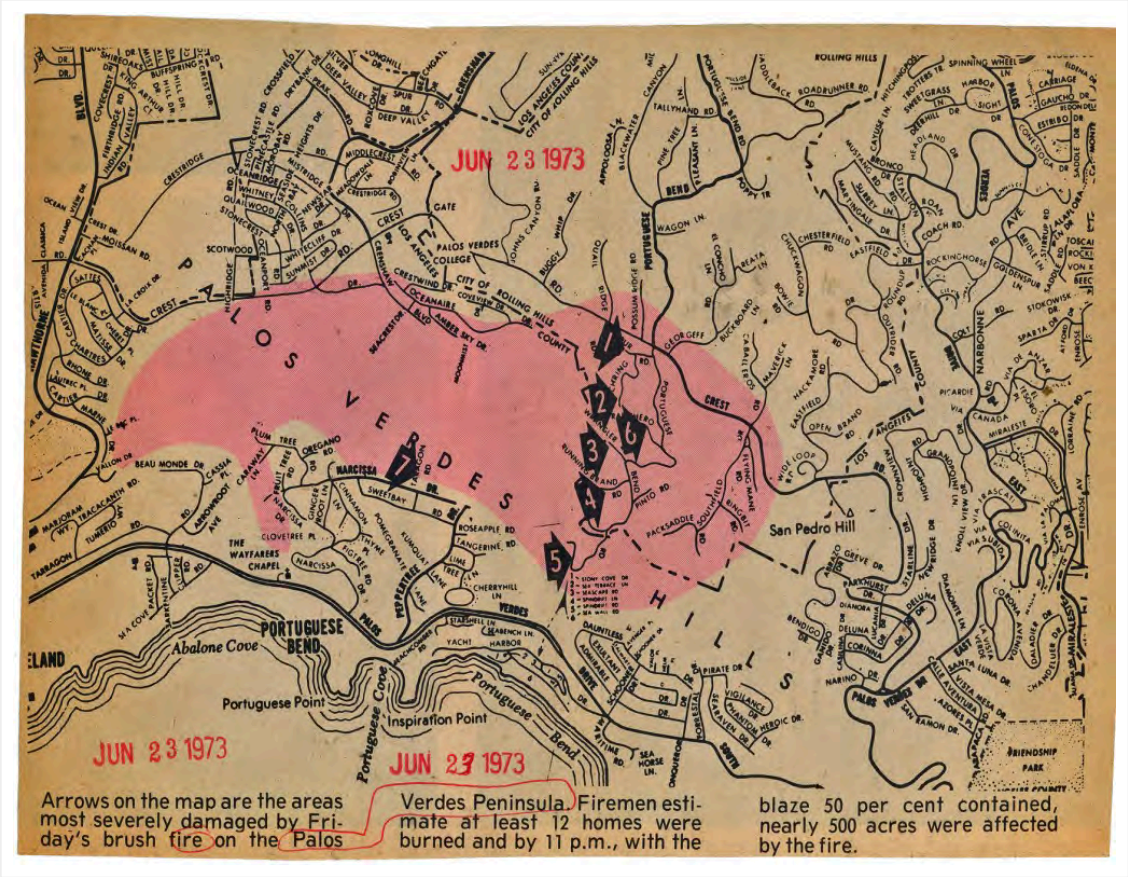

— Daily Breeze map of the June 22, 1973 Rolling HIlls fire, shown in pink. Numbered arrows indicate areas of most severe damage. Daily Breeze, June 23, 1973.

What followed next was chaos.

National Guardsmen on duty at the nearby Nike missile site on Crenshaw Boulevard near Crest Road heard popping noises and then saw puffs of smoke and the two boys running from the area across the canyon.

A dispatcher sent out the first call to local fire stations at 2:37 p.m. By 3 p.m., the fast-spreading fire was completely out of control.

It had been an unusually dry rainy season and strong breezes were blowing that day, so the fire spread rapidly through the Rolling Hills area.

— Unidentified man leaves as a house burns during the June 22, 1973 Rolling Hills fire. (Daily Breeze staff photo)

Before the blaze was tamed at 1 a.m. on Saturday, June 23, it had charred about 925 acres, burned 12 home to the ground, damaged at least 10 others others and caused an estimated $2 million in property losses. Somewhat miraculously, no one was seriously injured or killed in the conflagration.

Black smoke filled the skies, and hundreds of sightseers clogged nearby roads, including Crenshaw and Hawthorne boulevards and Highridge, Crest and Crestridge roads, in an attempt to view the blaze. Luckily, no one was hurt, especially in the early hours of the blaze when bystanders went right up to the edge of the fire area, before perimeters had been established.

Houses were destroyed on Cinch Ring, Wrangler, Paint Brush Canyon and Running Brand roads.

Warren McDermid called the Daily Breeze at about 3 p.m., saying that he had taken some excellent photos of the fire from his house at 3 Wrangler Road. He left a message, but when his call was returned, there was no answer. McDermid, his wife and a house guest had been forced to flee, and the house had been lost to the blaze.

— Remains of the house destroyed by fire at 1 Wrangler Road in Rolling Hills following the June 22, 1973 Rolling Hills fire. (Daily Breeze staff photo)

Three more houses were destroyed as the fire reached the Portuguese Bend area. Three houses near the Vanderlip mansion at 100 Vanderlip Drive were destroyed, including the former summer retreat owned by actor Charles Laughton.

In addition to two houses on Vanderlip, another home burned at 75 Narcissa Drive. Mrs. S.R. Green told the Daily Breeze, “It doesn’t appear that we’re in any serious danger,” from her house at 76 Narcissa Drive, while the 75 Narcissa house directly across the street continued to burn.

At one point, Los Angeles County Supervisor James A. Hayes and his wife narrowly escaped injury when flames jumped across Southfield Lane in Rolling HIlls while the pair were in their car following firefighters. The Fourth District supervisor had recently moved into a home on nearby Chuckwagon Road.

— A collie on a roof overlooking the blaze seems unconcerned as the Rolling Hills fire rages on June 22, 1973. (Daily Breeze staff photo)

Residents took to rooftops with hoses to water down their houses, grabbed shovels and garden tools to clear firebreaks and did whatever else they could to save their houses, animals and possessions.

Hundreds of firefighters battled the blaze, but some of the terrain proved inaccessible except by helicopter air drops.

By 8 p.m. Friday night, the blaze had been mostly brought under control, though mop-up efforts would continue well into Saturday.

As for the two boys, they were not charged. They expressed great remorse, and the authorities determined that there was no criminal intent on their part.

Destructive as the 1973 blaze was, it was not the largest fire in terms of size in South Bay history.

On Monday, Sept. 10, 1945, at about 3 p.m., a fire started by utility crews working on a downed power line on Blackwater Canyon Road near Crest Road, just a short distance east from the source point of the 1973 blaze, went on to burn an estimated 3,000 acres in the Rolling Hills area.

Fortunately, population was more sparse in the area in 1945, and only one home was completely destroyed. No one was injured, but 80 nearby homes were evacuated.

Residents described walls of flame 15 to 25 feet high in the area, and several garages, barns and other outbuildings were burned in the blaze.

Authorities estimated damage at $36,000, and one can only imagine the toll if the same fire were to burn in the area today.

— The Palos Verdes Peninsula fire of Aug. 28, 2009, as viewed from Del Cerro Park. File photo. (Steve McCrank / Staff Photographer)

The most recent major brush fire in the South Bay began on Thursday night, Aug. 27, 2009, at the upper ends of Narcissa and Peppertree drives, in the gated Portuguese Bend community near the Portuguese Bend Nature Preserve (now part of the Palos Verdes Nature Preserve) just north of the Trump National Golf Club.

It burned 230 acres of brush, threatened dozens of homes and forced 1,200 area residents to evacuate.

— A fire helicopter makes a night water drop on the Palos Verdes Peninsula fire on Aug. 28, 2009. File photo. (Steve McCrank / Staff Photographer)

No homes were lost and no injuries to residents or firefighters were reported. Its cause was unknown, though it was speculated that an electrical problem at a utility pole in the area may have been the source.

165 of the 230 acres charred in the blaze were part of the relatively new Nature Preserve, which was created in 2005.

An earlier fire on July 13, 2005 burned 212 acres of land near Del Cero Park on the Palos Verdes Peninsula, but no homes were lost.

Sources:

Daily Breeze files.

Los Angeles Times files.

This entry was posted in Uncategorized by **Sam Gnerre**. Bookmark the **permalink [https://blogs.dailybreeze.com/history/2014/11/07/the-most-destructive-brush-fire-in-south-bay-history/]** .

ALSO ON **SOUTH BAY HISTORY**

Cities find Fourth of July fireworks decisions ...

6 years ago · 1 comment

Things were different in 1939 than they are now, sure, but the Torrance ...

The Battle of Dominguez Rancho and "The Old ...

4 years ago · 1 comment

Historians have pored over the details of the October 1846 encounter known as ...

The Bartlett Senior Citizens Center has

5 years ago · 1 comment

The idea for a centrally located senior citizens center in Torrance first

1 Comment 1 Login ▾

G Join the discussion…

LOG IN WITH OR SIGN UP WITH DISQUS ?

Name

♡ Share Best Newest Oldest

A **amwinpv**

3 years ago

I remember it surprisingly well!

0 0 Reply

Subscribe Privacy Do Not Sell My Data

John Signo

From: Joshua Costello <Joshua.Costello@fire.lacounty.gov>
Sent: Monday, June 3, 2024 1:25 PM
To: Abbie Sedillos; John Signo
Cc: Marion Jaikowski; Martin Salazar; Frank Garrido; Shawn Tanji; Mark Tyler; Joshua Costello
Subject: RE: Fire Pits
Attachments: Bonfire & Recreational-Fire Permit Triggers, 2023 LACFC.docx

EXTERNAL EMAIL - This email was sent by a person from outside your organization. Exercise caution when clicking links, opening attachments or taking further action, before validating its authenticity.

Good Afternoon,

Thank you for the question. The trigger in Section 326 is pre-empted by the following highlighted verbiage in Section 105:

> **105.5.34 Open burning.** An operational permit is required for the kindling or maintaining of an open fire or a fire on any public street, alley, road, or other public or private ground. Instructions and stipulations of the permit shall be complied with.
>
> **Exception:** ~~R~~A recreational fire~~s~~ is subject to the provisions of this code, but is exempt from need for a permit provided that all of the following apply:
>
> 1. The fire is not located in a wildfire risk area or in a very high, high, or moderate fire hazard severity zone, except where located on private property with consent of the owner; meeting the size requirements in #2, below; and meeting the requirements of Sections 307.4 through 307.5.
> 2. The fire conforms to the definition of a "recreational fire", which limits the size of the fire to a total fuel area of 3 feet (914 mm) or less in diameter and 2 feet (610 mm) or less in height; limits the combustibles to burning no rubbish; and restricts the purpose of the fire to pleasure, religious, ceremonial, cooking, warmth or similar.
>
> For restrictions and requirements for each type of open burning, including but not limited to bonfires and recreational fires, see Section 307. For fires, including a small fire, in wildfire risk areas, see "Activities in wildfire risk areas" permit requirements (Sections 105.5.55.1 and 326.2).

In other words, at a 1- or 2-family dwelling, a FD permit is not required, even in a “wildfire risk area” (a term that includes the FHSZ’s), if all of the following are true:

1. It meets the parameters of a “recreational fire”:
   A total fuel area of 3 feet (914 mm) or less in diameter and 2 feet (610 mm) or less in height; limits the combustibles to burning no rubbish; and restricts the purpose of the fire to pleasure, religious, ceremonial, cooking, warmth or similar.
2. It is located on private property with consent of the owner.
3. It meets the requirements of 2023 LACFC Sections 307.4 through 307.5. See the attachment for those 2023 LACFC sections.

The reference in Section 105.5.34 to Sections 105.5.55.1 and 326.2 are really intended merely for awareness; in many cases events in a wildfire risk area will include other activities that trigger a permit on their own, and Fire did not want one of those events to simply see the exclusion in Section 105.5.34, Item #1, and think the event was thereby exempt from needing to abide by other rules and/or triggers applicable to activities in wildfire risk areas. Furthermore, even when an activity does not trigger the need for a permit, it is not exempt from code-compliant operations. Construction

and other events are not allowed to be substandard or unsafe simply because they are small enough not to trigger the more official and detailed oversight of a permitting process.

I hope that helps to clarify. Please advise if you'd like to discuss on the phone or further.

Thanks again.

Respectfully,
Josh
Fire Fighter Specialist Joshua Costello
Codes and Ordinances Unit, Fire Prevention Division
County of Los Angeles Fire Department
Joshua.Costello@fire.lacounty.gov
213-503-5468

From: Abbie Sedillos <asedillos@cityofrh.net>
Sent: Monday, June 3, 2024 10:15 AM
To: John Signo <jsigno@cityofrh.net>; Joshua Costello <Joshua.Costello@fire.lacounty.gov>
Cc: Marion Jaikowski <Marion.JAIKOWSKI@fire.lacounty.gov>; Martin Salazar <Martin.Salazar@fire.lacounty.gov>; Frank Garrido <Frank.Garrido@fire.lacounty.gov>; Shawn Tanji <Shawn.Tanji@fire.lacounty.gov>; Mark Tyler <Mark.Tyler@fire.lacounty.gov>
Subject: RE: Fire Pits

CAUTION: External Email. Proceed Responsibly.

Good morning Josh,

I'm the Planning Administrative Clerk at the City of Rolling Hills, and I have a quick question. I know recreational fires/portable outdoor fires are exempt from open burning/operational permits given they meet the requirements you listed below, but are they also exempt from the "Activities in wildfire risk areas" permit (Section 326.2)?

Thank you for your help!
Abbie

Abbie Sedillos
Administrative Clerk/Bookkeeper

City of Rolling Hills
2 Portuguese Bend Road, Rolling Hills CA 90274
Phone: (310) 377-1521 Email: asedillos@cityofrh.net

From: John Signo <jsigno@cityofrh.net>
Sent: Monday, June 3, 2024 8:42 AM
To: Joshua Costello <Joshua.Costello@fire.lacounty.gov>
Cc: Marion Jaikowski <Marion.JAIKOWSKI@fire.lacounty.gov>; Martin Salazar <Martin.Salazar@fire.lacounty.gov>; Frank Garrido <Frank.Garrido@fire.lacounty.gov>; Shawn Tanji <Shawn.Tanji@fire.lacounty.gov>; Mark Tyler

<Mark.Tyler@fire.lacounty.gov>; Abbie Sedillos <asedillos@cityofrh.net>
Subject: RE: Fire Pits

Josh,

Thank you for your response. It is very helpful! I think you've answered all our questions for now. It's very much appreciated.

John F. Signo, AICP
Director of Planning and Community Services

City of Rolling Hills
2 Portuguese Bend Road, Rolling Hills CA 90274
310.377.1521
jsigno@cityofrh.net

From: Joshua Costello <Joshua.Costello@fire.lacounty.gov>
Sent: Thursday, May 30, 2024 11:27 PM
To: John Signo <jsigno@cityofrh.net>
Cc: Marion Jaikowski <Marion.JAIKOWSKI@fire.lacounty.gov>; Martin Salazar <Martin.Salazar@fire.lacounty.gov>; Frank Garrido <Frank.Garrido@fire.lacounty.gov>; Shawn Tanji <Shawn.Tanji@fire.lacounty.gov>; Mark Tyler <Mark.Tyler@fire.lacounty.gov>; Joshua Costello <Joshua.Costello@fire.lacounty.gov>
Subject: Re: Fire Pits

EXTERNAL EMAIL - This email was sent by a person from outside your organization. Exercise caution when clicking links, opening attachments or taking further action, before validating its authenticity.

Yes, it appears that all of Rolling Hills is currently in the VHFHSZ,
per https://experience.arcgis.com/experience/03beab8511814e79a0e4eabf0d3e7247/, even despite the disclaimer on the webpage.

Local jurisdictions can only expand upon the zones designated by the State (per statute); they cannot unilaterally downgrade them. As the State put it, as I recall, the science is the science, and they are confident in their modeling program.

While it is true that the State is about to release the already overdue updated LRA (local responsibility area, as opposed to state-lands, or SRA) maps of the FHSZ's, which has been touted as based on better data, better modeling, and ember-cast modeling, I believe there is no indication that the FHSZ's will be receding; rather, there is an indication that the various zones will be growing and upgrading in rating, primarily due to the factoring in of ember-cast models. That said, the logistics of notifying each city throughout the State, and working through the legal proceedings to update that city's books, means that these updates may still be long in becoming effective.

Does that answer your question?

Respectfully,
Josh
Fire Fighter Specialist Josh Costello
Codes and Ordinances Unit, Fire Prevention Division
County of Los Angeles Fire Department
Joshua.Costello@fire.lacounty.gov

213-503-5468

From: John Signo <jsigno@cityofrh.net>
Sent: Thursday, May 30, 2024 8:42:28 PM
To: Joshua Costello <Joshua.Costello@fire.lacounty.gov>
Cc: Marion Jaikowski <Marion.JAIKOWSKI@fire.lacounty.gov>; Martin Salazar <Martin.Salazar@fire.lacounty.gov>; Frank Garrido <Frank.Garrido@fire.lacounty.gov>; Shawn Tanji <Shawn.Tanji@fire.lacounty.gov>; Mark Tyler <Mark.Tyler@fire.lacounty.gov>
Subject: RE: Fire Pits

CAUTION: External Email. Proceed Responsibly.

Thanks, Josh. This is very helpful!

Another question, it is my understanding the City of Rolling Hills is in a Very High Fire Hazard Severity Zone (VHFHSZ). Can you confirm it is still in a VHFHSZ or has it been taken out, and if so, how does that affect our city?

John F. Signo, AICP
Director of Planning and Community Services

City of Rolling Hills
2 Portuguese Bend Road, Rolling Hills CA 90274
310.377.1521
jsigno@cityofrh.net

From: Joshua Costello <Joshua.Costello@fire.lacounty.gov>
Sent: Thursday, May 30, 2024 7:31 PM
To: John Signo <jsigno@cityofrh.net>
Cc: Marion Jaikowski <Marion.JAIKOWSKI@fire.lacounty.gov>; Martin Salazar <Martin.Salazar@fire.lacounty.gov>; Frank Garrido <Frank.Garrido@fire.lacounty.gov>; Shawn Tanji <Shawn.Tanji@fire.lacounty.gov>; Mark Tyler <Mark.Tyler@fire.lacounty.gov>; Joshua Costello <Joshua.Costello@fire.lacounty.gov>
Subject: RE: Fire Pits
Importance: High

EXTERNAL EMAIL - This email was sent by a person from outside your organization. Exercise caution when clicking links, opening attachments or taking further action, before validating its authenticity.

Good Evening,

I hope to follow up with a call, but I want to provide you with our attached reference document on this issue, as well as the following summary. I'd planned to call earlier, but urgent assignments kept coming in; please accept my apology.

Essentially, the answer to what I believe you are asking, is that at a 1- or 2-family dwelling, a FD permit is not required, even in a "wildfire risk area" (a term that includes the FHSZ's), if all of the following are true:

1. It meets the parameters of a "recreational fire":
   A total fuel area of 3 feet (914 mm) or less in diameter and 2 feet (610 mm) or less in height; limits the combustibles to burning no rubbish; and restricts the purpose of the fire to pleasure, religious, ceremonial, cooking, warmth or similar.
2. It is located on private property with consent of the owner.
3. It meets the requirements of 2023 LACFC Sections 307.4 through 307.5. See the attachment for those 2023 LACFC sections.

If the device in question meets the following definition, then the main guidance is to defer to the manufacturer's instructions, or 15-foot separation from combustibles in lieu thereof.

> **PORTABLE OUTDOOR FIREPLACE.** A portable, outdoor, solid-fuel-burning fireplace that may be constructed of steel, concrete, clay or other noncombustible material. A portable outdoor fireplace may be open in design, or may be equipped with a small hearth opening and a short chimney or chimney opening in the top.

The only scenario that I believe the attachment does not exactly address is where a gas burner is used, without combustibles other than the gas (presumably making the device, in most cases, what the Mechanical Code calls an "Outdoor Open Flame Decorative Appliance" — see 2022 CMC Section 932.0), in which case the governing code is the CA Mechanical Code and NFPA 54 (which the Mechanical Code references and reiterates in Section 932). For the application of the CMC, I'll defer to your building official.

In all cases, a person who intentionally ignites a fire, is responsible for it, and both necessary means of extinguishment shall be secured, and necessary safeguards shall be implemented, whether a permit is required or not.

> **307.1 General.** A person shall not kindle or maintain or authorize to be kindled or maintained any open burning unless conducted and approved in accordance with Sections 307.1.1 through 307.7.
>
> > **307.1.1 Prohibited open burning.** Open burning shall be prohibited when atmospheric conditions or local circumstances make such fires hazardous.
>
> . . .
>
> **307.5 Attendance.** Open burning, bonfires, recreational fires and use of portable outdoor fireplaces shall be constantly attended until the fire is extinguished. Not fewer than one portable fire extinguisher complying with Section 906 with a minimum 4-A rating or other approved on-site fire-extinguishing equipment, such as dirt, sand, water barrel, garden hose or water truck, shall be available for immediate utilization.

Regarding the *Fire* Code portions that LA County does not amend, they defer back to the 2022 CA Fire Code:

> The following link lists, in the order of California-Fire-Code section number, the sections to which a Los-Angeles-County amendment to the *2022 edition of the California Fire Code* (2022 CFC) publication exists. They are codified as Los Angeles County Code (LACC) Title 32. **Together with the unamended adopted portions of the 2022 CFC, these Los-Angeles-County amendments comprise the *2023 Los Angeles County Fire Code* (2023 LACFC):**
>
> > https://library.municode.com/ca/los_angeles_county/codes/code_of_ordinances?nodeId=TIT32FICO
>
> Fire Code section numbers that are not provided at the link above, revert to the unamended content of the adopted portions of the 2022 CFC publication. **The unamended 2022 CFC publication can be viewed at no cost at:**
>
> > https://codes.iccsafe.org/content/CAFC2022P2/chapter-1-scope-and-administration#CAFC2022P2_Pt01_Ch01_SubChI

I hope this helps! Please feel free to reach out if you would like to discuss further. My regular day off is Friday.

Thank you for your patience.

Respectfully,
Josh

Fire Fighter Specialist Joshua Costello
Codes and Ordinances Unit, Fire Prevention Division
County of Los Angeles Fire Department
Joshua.Costello@fire.lacounty.gov
213-503-5468

From: Marion Jaikowski <Marion.JAIKOWSKI@fire.lacounty.gov>
Sent: Wednesday, May 29, 2024 3:59 PM
To: Joshua Costello <Joshua.Costello@fire.lacounty.gov>
Subject: FW: Fire Pits

From: John Signo <jsigno@cityofrh.net>
Sent: Thursday, May 23, 2024 12:15 PM
To: Marion Jaikowski <Marion.JAIKOWSKI@fire.lacounty.gov>
Cc: Martin Salazar <Martin.Salazar@fire.lacounty.gov>
Subject: RE: Fire Pits

CAUTION: External Email. Proceed Responsibly.

Hi Marion,

Martin was able to send me the Fire Code amendments. Thank you!

I'm following up to see if you've come across anything else. Rolling Hills is entirely single-family residential (no commercial properties) and in a Very High Fire Hazard Severity Zone (VHFHSZ).

According to your Code, an operational permit is needed for certain operations. Does your department issue operational permits for fire pits, bonfires, and outdoor chimneys?

Can you provide any more information on review and approval of firepits, bonfires, and outdoor chimneys in a VHFHSZ?

John F. Signo, AICP
Director of Planning and Community Services

City of Rolling Hills
2 Portuguese Bend Road, Rolling Hills CA 90274
310.377.1521
jsigno@cityofrh.net

From: Martin Salazar <Martin.Salazar@fire.lacounty.gov>
Sent: Thursday, April 25, 2024 1:09 PM
To: John Signo <jsigno@cityofrh.net>
Subject: RE: Fire Pits

EXTERNAL EMAIL - This email was sent by a person from outside your organization. Exercise caution when clicking links, opening attachments or taking further action, before validating its authenticity.

John,

Attached are the County of Los Angeles Fire Code Amendments. Section 307.4 of the California Fire Code talks about bonfires/recreational fires.

Martin

From: John Signo <jsigno@cityofrh.net>
Sent: Thursday, April 25, 2024 12:37 PM
To: Marion Jaikowski <Marion.JAIKOWSKI@fire.lacounty.gov>; Martin Salazar <Martin.Salazar@fire.lacounty.gov>
Cc: Planning <Planning@cityofrh.net>
Subject: Fire Pits

CAUTION: External Email. Proceed Responsibly.

Hi Marion and Martin,

We're researching requirements for fire pits and noticed Fire Code Sections 307.4 through 307.5.2 are missing, even though Section 105.5.34 refers to those sections. Do you know if these sections were removed?

Do you have any handouts or material about fire pits that you can send us?

John F. Signo, AICP
Director of Planning and Community Services

City of Rolling Hills
2 Portuguese Bend Road, Rolling Hills CA 90274
310.377.1521
jsigno@cityofrh.net

Bonfire & Recreational-Fire Permit Triggers

2023 LACFC

From the 2023 LACFC (New changes were made in order to try to clarify when a permit is required*):

*Whether a permit is required is dependent on a number of factors:

1. Size:
   a. A permit is generally only required if it's larger than a total fuel area of **3 feet in diameter** and **2 feet in height**.
2. But if in the WUI or a Fire Hazard Severity Zone (FHSZ), then the following *also* matters:
   a. Permission of the property owner.
   b. Burning no rubbish.
   c. For/Not for Commercial/Industrial Use.
   d. Compliance with Sections 307.4 and 307.5 (provided below).

**The applicant is always supposed to comply with Sections 307.4 and 307.5, even if a permit is not required/necessary. But the requirements of 307.4 and 307.5 are different depending on if the fire in question is a "recreational fire" (i.e., a total fuel area of 3 feet or less in diameter and 2 feet or less in height, and not for commercial/industrial use), or a "bonfire" (bigger than a recreational fire). Both a bonfire and a recreational fire are "open burning". LACoFD does not allow burning "rubbish".

Section 202 is **amended by LAC** (for the 2023 LACFC) to read as follows:

BONFIRE. An outdoor fire utilized for ceremonial purposes. A bonfire is a fire that would otherwise be considered a recreational fire except that it exceeds the size restrictions of a recreational fire, those being a total fuel area of 3 feet (914 mm) or less in diameter and 2 feet (610 mm) or less in height.

. . .

OPEN BURNING. The burning of materials wherein products of combustion are emitted directly into the ambient air without passing through a stack or chimney from an enclosed chamber. Open burning does not include road flares, smudgepots and similar devices associated with safety or occupational uses typically considered open flames, recreational fires or use of portable outdoor fireplaces. For the purpose of this definition, a chamber shall be regarded as enclosed when, during the time combustion occurs, only apertures, ducts, stacks, flues or chimneys necessary to provide combustion air and permit the escape of exhaust gas are open.

. . .

PORTABLE OUTDOOR FIREPLACE. A portable, outdoor, solid-fuel-burning fireplace that may be constructed of steel, concrete, clay or other noncombustible material. A portable outdoor fireplace may be open in design, or may be equipped with a small hearth opening and a short chimney or chimney opening in the top.

. . .

RECREATIONAL FIRE. An outdoor fire burning materials other than rubbish where the fuel being burned is not contained in an incinerator, outdoor fireplace, portable outdoor fireplace, barbeque grill or barbeque pit and has a total fuel area of 3 feet (914 mm) or less in diameter and 2 feet (610 mm) or less in height for pleasure, religious, ceremonial, cooking, warmth or similar purposes.

Section 105.5.34 is **amended by LAC** to read as follows:

105.5.34 Open burning. An operational permit is required for the kindling or maintaining of an open fire or a fire on any public street, alley, road, or other public or private ground. Instructions and stipulations of the permit shall be complied with.

Exception: ~~R~~A recreational fire~~s~~ is subject to the provisions of this code, but is exempt from need for a permit provided that all of the following apply:

1. The fire is not located in a wildfire risk area or in a very high, high, or moderate fire hazard severity zone, except where located on private property with consent of the owner; meeting the size requirements in #2, below; and meeting the requirements of Sections 307.4 through 307.5.
2. The fire conforms to the definition of a "recreational fire", which limits the size of the fire to a total fuel area of 3 feet (914 mm) or less in diameter and 2 feet (610 mm) or less in height; limits the combustibles to burning no rubbish; and restricts the purpose of the fire to pleasure, religious, ceremonial, cooking, warmth or similar.

For restrictions and requirements for each type of open burning, including but not limited to bonfires and recreational fires, see Section 307. For fires, including a small fire, in wildfire risk areas, see "Activities in wildfire risk areas" permit requirements (Sections 105.5.55.1 and 326.2).

Sections 105.5.55.1, 105.5.55.10, and 326.2 are **added by LAC** to read as follows:

105.5.55.1 Activities in wildfire risk areas. An operational permit is required for any of the activities as described in Section 326.2 of this code.

. . .

105.5.55.10 Recreational fire. See "Open burning" permit (Sections 105.5.34 and 307), and "Activities in wildfire risk areas" permit (Sections 105.5.55.1 and 326.2) requirements.

. . .

326.2 Permit required. Permits shall be required as set forth in Sections 105.5 and 105.6.

No person shall establish or conduct any of the following or similar activities in a wildfire risk area without first securing a permit:

1. Recreational activities including, but not limited to, rifle ranges, carnivals and fairs, public assembly events, fireworks, overnight camping, and open burning.
2. Temporary or permanent activities including, but not limited to, stands for cooking or other activities which could provide a source of ignition.

Section 307 is **amended by LAC** to read as follows:

SECTION 307
OPEN BURNING, RECREATIONAL FIRES AND PORTABLE OUTDOOR FIREPLACES

307.1 General. A person shall not kindle or maintain or authorize to be kindled or maintained any open burning unless conducted and approved in accordance with Sections 307.1.1 through 307.7.

307.1.1 Prohibited open burning. Open burning shall be prohibited when atmospheric conditions or local circumstances make such fires hazardous.

Exception: Prescribed burning for the purpose of reducing the impact of wildland fire when authorized by the fire code official.

307.2 Permit required. A permit shall be obtained from the fire code official in accordance with Section 105.5 prior to kindling a fire for recognized silvicultural or range or wildlife management practices, prevention or control of disease or pests, or a bonfire. Application for such approval shall only be presented by and permits issued to the owner of the land on which the fire is to be kindled.

A permit shall be obtained from the fire code official in accordance with Section 105.5 prior to kindling a recreational fire where the fuel is not contained as described in Chapter 3 nor limited as defined in Section 202, RECREATIONAL FIRE, to having a total fuel area of 3 feet (914 mm) or less in diameter and 2 feet (610 mm) or less in height, for pleasure, religious, ceremonial, cooking, warmth or similar purposes.

307.2.1 Authorization. Where required by State or local law or regulations, open burning shall only be permitted with prior approval from the fire code official, a United States Forest Service Officer having jurisdiction, or the State or local air and water quality management authority, provided that all conditions specified in the authorization are followed.

307.3 Extinguishment authority. Where open burning creates or adds to a hazardous situation, or a required permit for open burning has not been obtained, the fire code official is authorized to order the extinguishment of the open burning operation.

307.4 Location. The location for open burning shall be not less than 50 feet (15 240 mm) from any structure, and provisions shall be made to prevent the fire from spreading to within 50 feet (15 240 mm) of any structure.

Exceptions:

1. Fires in approved containers that are not less than 15 feet (4572 mm) from a structure.
2. The minimum required distance from a structure shall be 25 feet (7620 mm) where the pile size is 3 feet (914 mm) or less in diameter and 2 feet (610 mm) or less in height.

307.4.1 Bonfires. A bonfire shall not be conducted within 50 feet (15 240 mm) of a structure or combustible material unless the fire is contained in a barbecue pit. Conditions that could cause a fire to spread within 50 feet (15 240 mm) of a structure shall be eliminated prior to ignition.

307.4.2 Recreational fires. Recreational fires shall not be conducted within 25 feet (7620 mm) of a structure or combustible material. Conditions that could cause a fire to spread within 25 feet (7620 mm) of a structure shall be eliminated prior to ignition.

307.4.3 Portable outdoor fireplaces. Portable outdoor fireplaces shall be used in accordance with the manufacturer's instructions and shall not be operated within 15 feet (3048 mm) of a structure or combustible material.

Exception: Portable outdoor fireplaces used at one- and two-family dwellings.

307.5 Attendance. Open burning, bonfires, recreational fires and use of portable outdoor fireplaces shall be constantly attended until the fire is extinguished. Not fewer than one portable fire extinguisher complying with Section 906 with a minimum 4-A rating or other approved on-site fire-extinguishing equipment, such as dirt, sand, water barrel, garden hose or water truck, shall be available for immediate utilization.

307.6 Open fires. Permits shall be required as set forth in Section 105.6.
A person shall not build, light, maintain, or cause or permit to be built, lighted, or maintained, any open outdoor fire or use or cause or permit to be used, any open outdoor fire for any purpose except:

1. When such fire is set or permission for such fire is given in the performance of the official duty of any public officer, and the fire, in the opinion of such public officer, is necessary for:
   (i) The purpose of the prevention of a fire hazard which cannot be abated by any other means; or
   (ii) The instruction of public employees in the methods of fighting fire.
2. When such fire is set pursuant to permit on property used for industrial or institutional purposes for the purpose of instruction of employees in methods of fighting fire.
3. When such fire is set in the course of any agricultural operation in the growing of crops or raising of fowl or animals.

4. On a public beach area owned, managed, or controlled by the County, otherwise permitted by this code.
5. In a County-owned park or recreation camp as otherwise permitted by this code.
6. Bonfires permitted by the fire code official.
7. For cooking, recreational, or ceremonial fires on private property with a maximum fuel area of 3 feet (914 mm) or less in diameter and 2 feet (610 mm) or less in height, in locations outside of wildfire risk areas.

307.7 Designated open fire areas. The fire code official is authorized to designate places on private property, with the permission of the owner thereof, or upon any public road, or within any public park, or upon any public land, where open fires may be built.

The fire code official may place or cause to be placed uniform signs or posters on or at such premises indicating the place or limits where such fires may be built and maintained without further permission; however, it shall be unlawful to leave, or cause or permit to be left unattended, any fire burning in such place.

City of Rolling Hills INCORPORATED JANUARY 24, 1957

Agenda Item No.: 16.A
Mtg. Date: 06/10/2024

TO: **HONORABLE MAYOR AND MEMBERS OF THE CITY COUNCIL**

FROM: **CHRISTIAN HORVATH, CITY CLERK / EXECUTIVE ASSISTANT TO CITY MANAGER**

THRU: **KARINA BAÑALES, CITY MANAGER**

SUBJECT: **CONFERENCE WITH LEGAL COUNSEL - INITIATION OF LITIGATION A CLOSED SESSION WILL BE HELD, PURSUANT TO GOVERNMENT CODE § 54956.9(C) AND (D)(4) REGARDING THE DECISION OF WHETHER TO INITIATE LITIGATION (1 CASE)**

DATE: **June 10, 2024**

BACKGROUND:
None.

DISCUSSION:
None.

FISCAL IMPACT:
None.

RECOMMENDATION:
None.

ATTACHMENTS:

City of Rolling Hills INCORPORATED JANUARY 24, 1957

Agenda Item No.: 16.B
Mtg. Date: 06/10/2024

TO: **HONORABLE MAYOR AND MEMBERS OF THE CITY COUNCIL**

FROM: **CHRISTIAN HORVATH, CITY CLERK / EXECUTIVE ASSISTANT TO CITY MANAGER**

THRU: **KARINA BAÑALES, CITY MANAGER**

SUBJECT: **CONFERENCE WITH LEGAL COUNSEL: THREATENED LITIGATION GOVERNMENT CODE SECTION 54956.9(D)(2) AND (E)(3)**
THE CITY COUNCIL FINDS, BASED ON ADVICE FROM LEGAL COUNSEL, THAT DISCUSSION IN OPEN SESSION WILL PREJUDICE THE POSITION OF THE CITY IN THE LITIGATION.
NUMBER OF POTENTIAL CASES: (7)
(GOVERNMENT CLAIMS ACT FORM SUBMITTED BY VARIOUS PROPERTY OWNERS IN RANCHO PALOS VERDES AGAINST THE CITY OF ROLLING HILLS ALLEGING DAMAGE TO PROPERTY)

DATE: **June 10, 2024**

BACKGROUND:
None.

DISCUSSION:
None.

FISCAL IMPACT:
None.

RECOMMENDATION:
None.

ATTACHMENTS: